Lunar Food Bite Dispenser
Honorable Mention
for
NASA HUNCH
Design and Prototyping 2021

Congratulations for being chosen to receive an Honorable Mention for NASA HUNCH Design and Prototype 2021. This is to provide more praise for those who have done significant design and testing. Take pride in knowing that your work demonstrated many significant innovations and ideas. HUNCH recognizes that your team put a lot of thought and time into your design and testing. You had multiple prototypes you worked through, completed several interesting ideas, did testing with each prototype, demonstrated a deeper knowledge and skill in CAD.

Although you are not being invited to the Final Design Review, your work will remain on the HUNCH design and prototype page where it will continue to show the hard work your team put into the project.

PROJECT

Problem statement:

Develop a food dispenser that allows the astronauts to eat pellets while working on the moon without having to remove their helmets or use their hands.

Solution:

Our team has developed a solution built off of the idea of a PEZ dispenser, which pushes up candy through a hole by way of a "lever". Taking the level out of the picture, and allowing the spring to constantly push the pellets out once the Pellet above has been moved up or taken out by the astronaut.

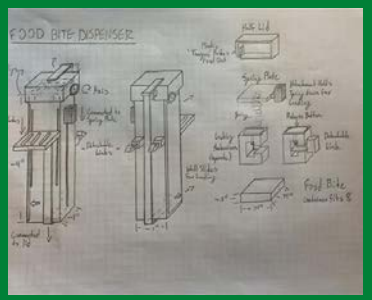

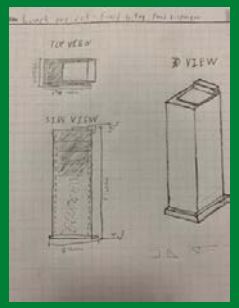

Brainstorm designs for prototype

DESIGN

Through the use of a rectangular container, springs, a fool proof lid, one can load the dispenser, using a hinge on the back of the " lid" that can be pulled back revealing where the pellets can be placed and stored.

Ergonomic:

Insert pellets in through the lid and dispense by use of the spring.at the bottom.

Ease of manufacture:

Depending on each piece the manufacturing ease varies whether that be the rectangular container or the back and lid. Though in general it is neither hard nor easy to make but in between.

Economics:

Depending on the suppler or manufacturer of the supplies, it ccost about $80-$200.

CONSTRAINTS

- Pellet size - 1"x0.75"x0.5
- hold a minimum of 8 pellets
- be able to be used without hands
- small enough to have 2-3 dispensers in the helmet at once
- removable from helmet
- edible wrappers to prevents crumbs from being a problem
- survive extreme temperatures from -250 F 250 f
- Low chance of clogging

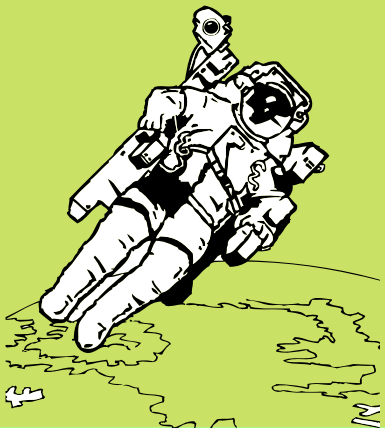

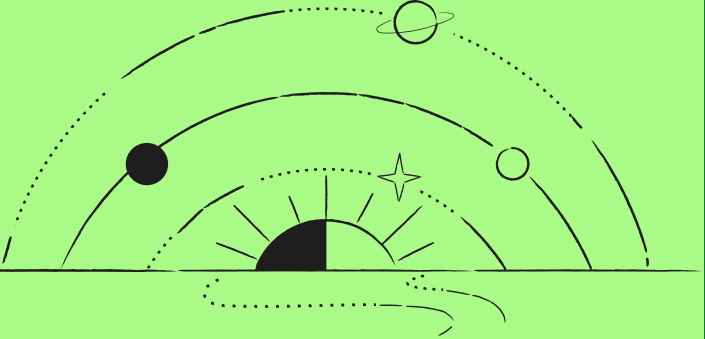

FOOD DISPENSER

A NASA 2021 HUNCH PROJECT

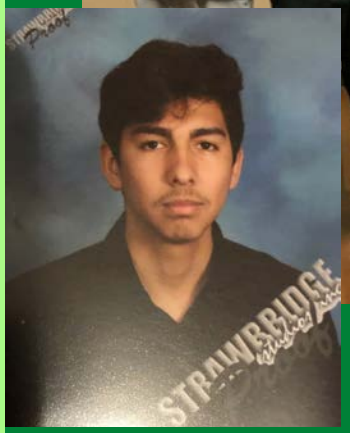

About the Team

Rada Gallegos : rada.gallegos@gmail.com
Niam Ziadi : niamzaidi@gmail.com
James Brandt : Jamesbrandt630@yahoo.com
Edwin Gonzales : edwin.gonzales02@yahoo.com
Grant McCombs : grant1610@icloud.com
Phillips Henshaw : Phenshaw02@gmail.com

Contact Information

Advisor: Ms. Elizabeth McCarty
2305 East Main Street
League City, Texas 77573
Phone: (281) 284-1700
Email: emccarty@ccisd.net

Thank you!

PROTOTYPE IMAGES

Images of Auto Desk Design

Images of lego Design

Images of the wooden prototype

Food Dispenser

Conroe High School
Mr. Canestorp
Eric Carmona

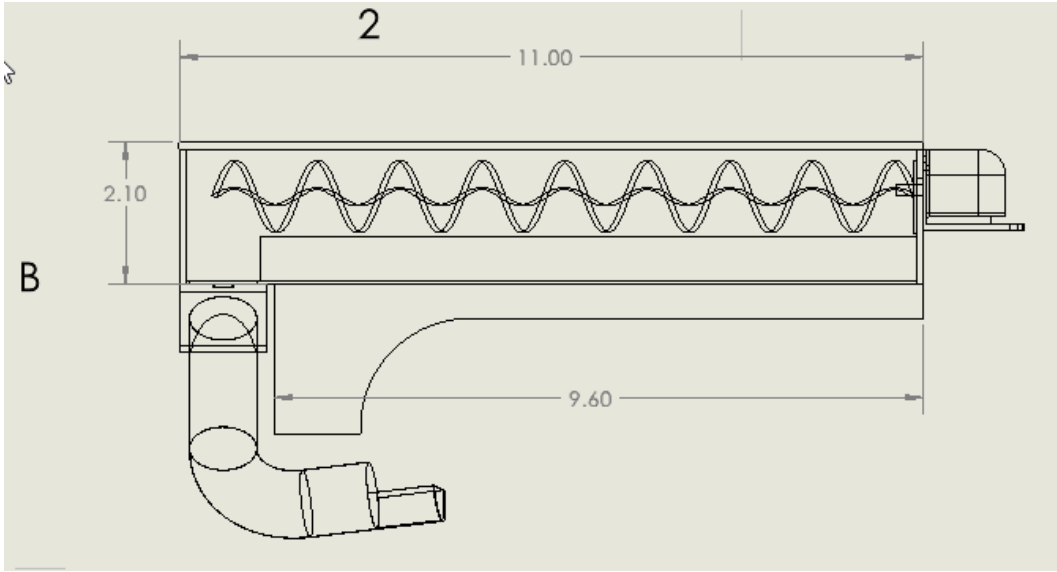

Description: The food dispenser is small and comfortable enough to fit in the helmet of the astronaut while they are wearing it. It has foam at the bottom of the container so that it is comfortable when worn. There is a button on the side that when pressed against the helmet will make a motor turn an archimedes screw. The screw will push food bites to the end of the container and drop them into a tube that leads to the astronaut's mouth.

Purpose: The food dispenser is supposed to feed the astronauts without the use of their hands and while in their suits.

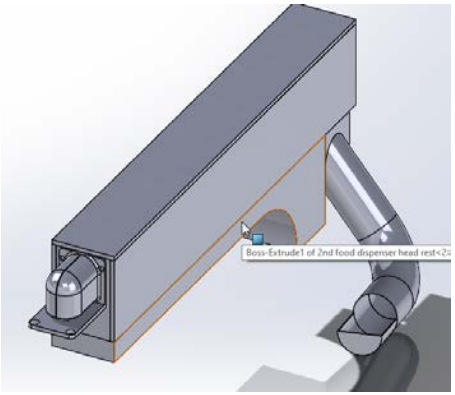

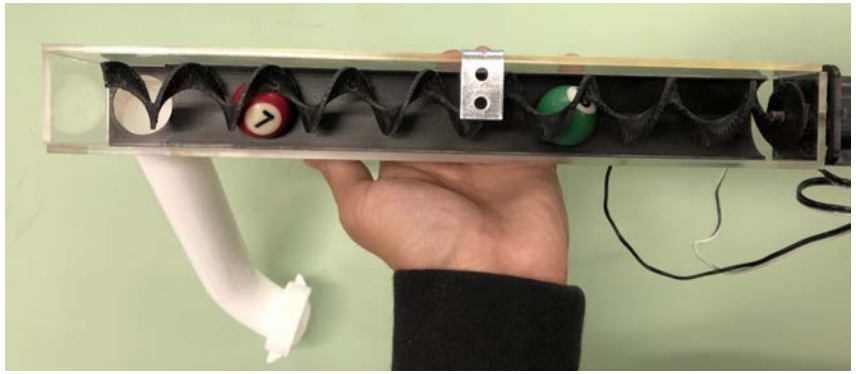

NASA astronauts walk around in their space suits for six to eight hours at a time and need food to keep them energized during their extended journeys. Currently, NASA astronauts only have access to a singular bar which offers no variety and often leaves behind crumbs within the spacesuit helmet which could inhibit the astronaut during their journey. Alternatively, food bite dispenser, The Button, provides a convenient and simplistic way for astronauts to access a variety of food bites within their spacesuits.

Easy...

The Button requires minimal operation from the astronaut. The astronaut just bites down or presses the button and the food-bites are dispensed.

Functional...

The Button controls the outflow of food-bite units so that the units are dispensed individually when The Button is pressed.

Simple...

The Button does not require elaborate electronics or mechanics. Instead, it operates using simple spring loaded offset valves.

Sleek...

The Button does not interfere with the astronaut's field of vision or other duties. The placement and curved design allow for The Button to take up a minimal amount of space.

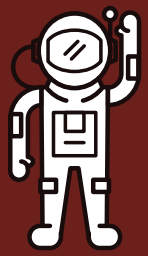

CONTACT US

Clear Creek ISD
Clear Creek High School
Instructor Mr. Merritt
rmerritt1@ccisd.net
2305 E Main St, League City, TX 77573

THE BUTTON

By

Benjamin Girouard
Katya Licona
Lizbeth Zarate

For

Instructor Mr. Merritt
Architecture and Civil Engineering
Clear Creek High School
Clear Creek ISD

NASA HUNCH
High school students United with NASA to Create Hardware

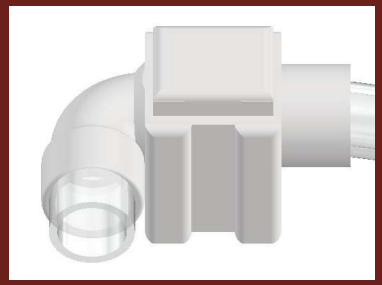

Step 1 depicts The Button at its resting position with the first valve of the Valve Button is blocking the food-bites from entering the Button Base.

Step 2 depicts The Button when the Valve Button pressed. This resolves the offset of the first valve which allows the food-bite to enter The Button. However, the Food Bite cannot exit The Button because the second valve of the Valve Button is offset.

Image 2 depicts The Button back at its resting position which blocks any more food-bites from entering The Button, but it allows the initial food-bite to leave The Button.

Step 1: The Button at rest

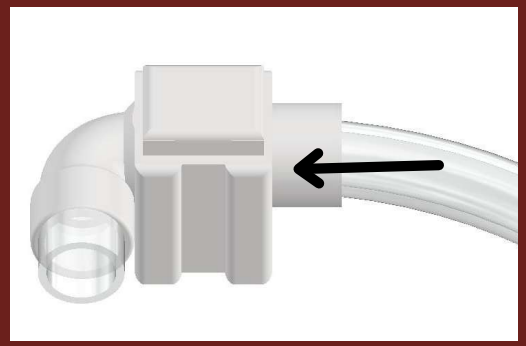

Step 2: The Button pressed

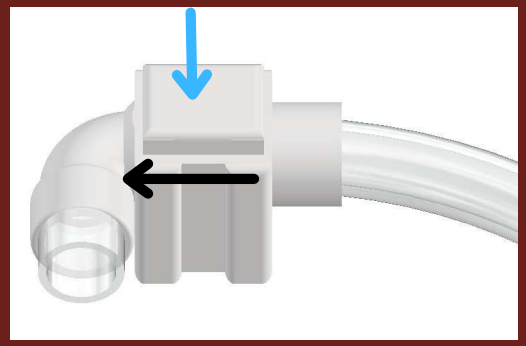

Step 3: The Button at rest

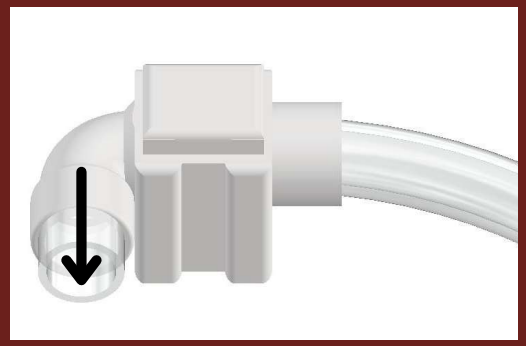

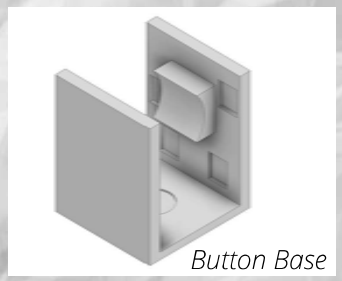

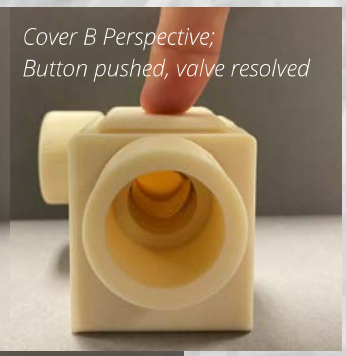

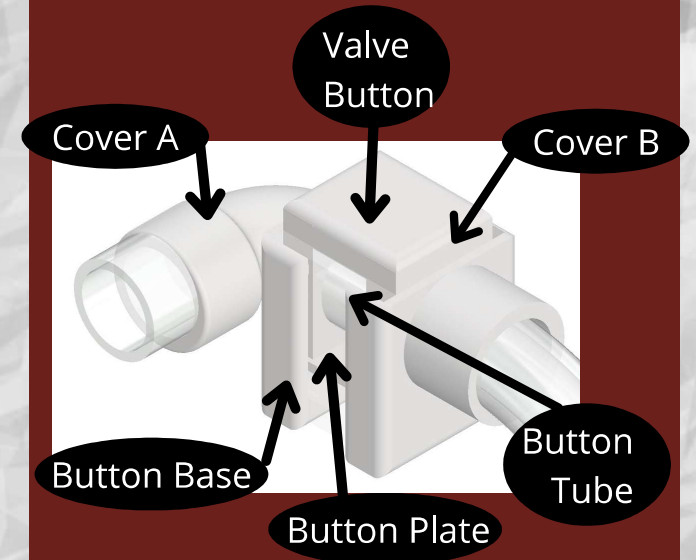


OLD NA
2002

Critical Design Review

Project: **Lunar Food Bite Dispenser**
School Name: **Space Coast Jr/Sr High School**
Teacher: **Mr. Luis Reyes**
Team: **Nathan Scuderi, William Nolen, Sebastian Williams**

Description:

Our team came up with a food bite dispenser that attaches to your face/around your head rather than on the helmet, reduces visual blocks, reduces mess and with automation there's no issues getting the food out. The first thing to focus on when doing any project is to check if it satisfies the Criteria and doesn't exceed the constraints, with our project this was our main focus. We did everything in our power to ensure that we didn't exceed any limitations and that our dispenser wouldn't do things such as block vision, take up too much space or even not hold enough bites. We ensure that our project has met all criteria and constraints. We have also worked on our prototype for the dispenser, it is a working representation of what our dispenser will do and is very accurate to what we would like it to look like. We have a 3D rendering and due to the fact that it is 3D printed it is spot on to what we have physically and will also fully represent what we made. While the prototype does not have the feature, we believe that the working prototype will be a spring loaded design that pushes the food bites against the "slider" and when the automated button is pressed the said slider will rotate and allow the food bite through.

Our testing Data shows what we were able to accomplish with the prototype not being automated, while it can still work it isn't exactly as intended and we have to use another force to make the food bite go through the dispenser and past the pin that we currently have to rotate manually. Although it isn't an issue it may require some minor detailing on how we demonstrate the project's capabilities.

As for replication of the design, currently we don't feel like we need the list of materials simply because it was 3D printed and doesn't require anything beyond the 3D model we have (our solidworks Drawing). When it comes to the microgravity factor, we have designed a project that entirely seals the food in and will cause as little of a mess as possible, this was the meaning for the automation and the "pin and slider" component to our project. We believe that our project is very well thought out and very unique in design, this is what led us to design it with the 3D printer rather than using off the shelf items. However we have tried to simplify the dispenser as much as possible and believe that this is the most efficient design and the best set of materials that can be used at an affordable price.

Prototype: Pin open

-

Pin Closed

F.A.D.E

FEEDING ASTRONAUTS DURING EXPLORATION

Will and Bryce

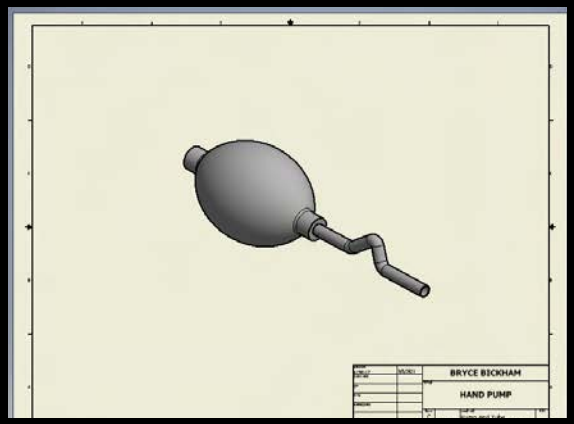

Hand Pump

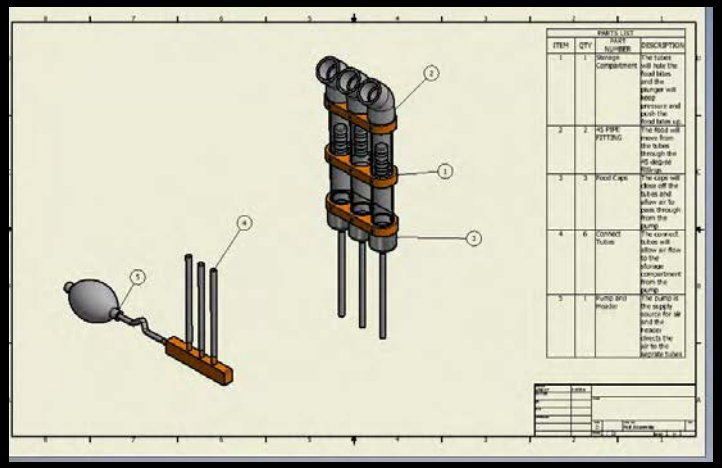

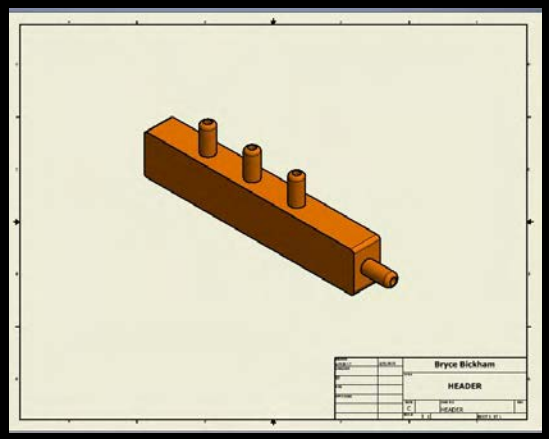

Header

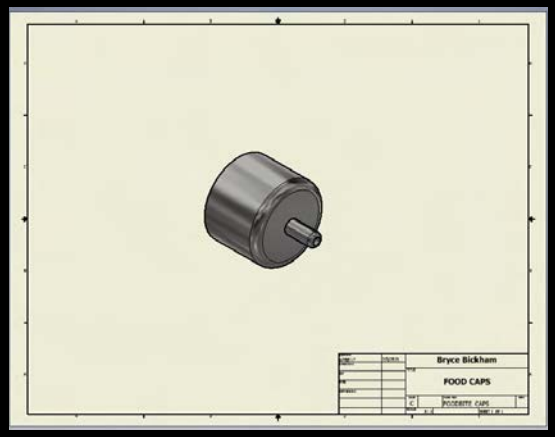

Food Caps

F.A.D.E will feed the future

F.A.D.E

FEEDING ASTRONAUTS DURING EXPLORATION

Will and Bryce

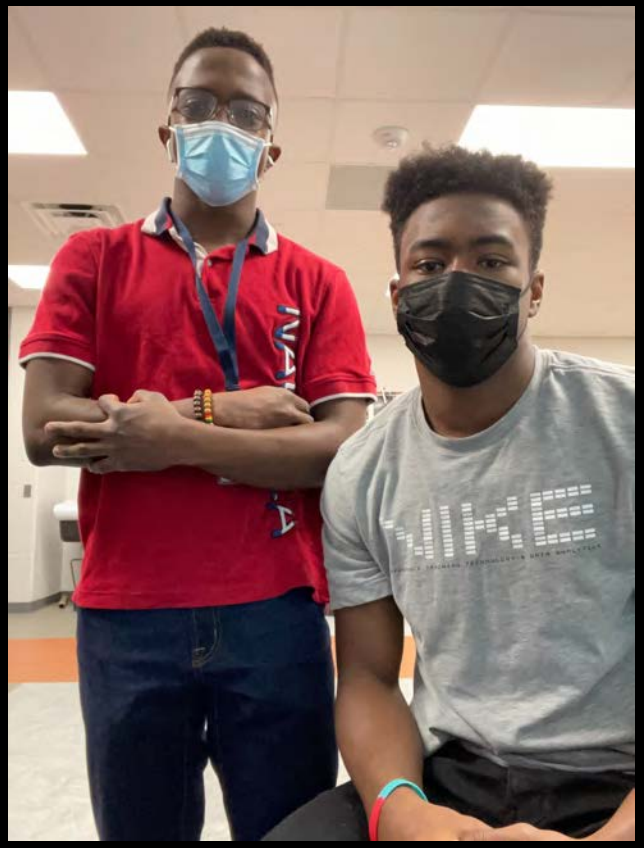

There are three tube sized chambers in the food bite dispenser. The chambers are loaded with the foodbites as well as a plunger beneath it all. The bottom on the chambers are capped off and have a small hole in the center to allow for airflow. These caps are connected to a hose that is connected to a pump. Once squeezed, the pump will propel the food upward into the mouth of the dispenser, allowing the user to eat the food.

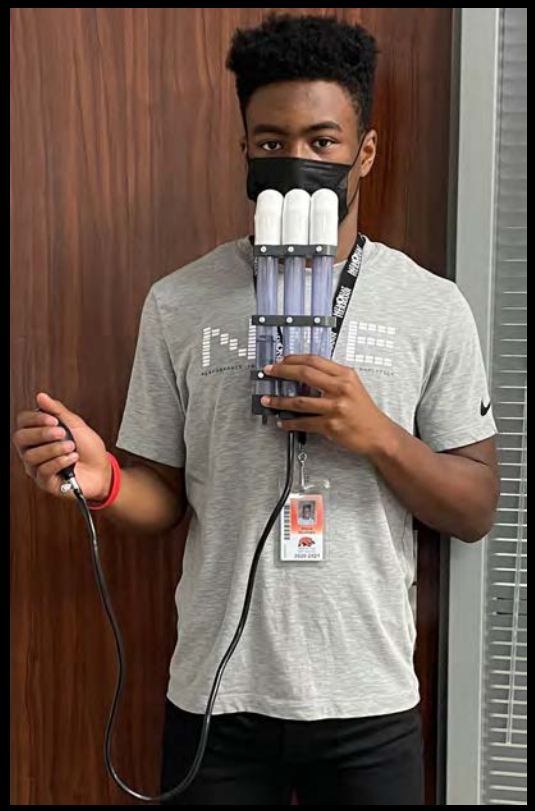

BRIDGELAND HIGHSCHOOL

10707 Mason Rd, Cypress TX 77433

Will

Bryce

Critical Design Review

Project Title: **Lunar Food Bites Dispenser**

School Name: **Space Coast Jr/Sr High School**

Teacher: **Mr. Luis Reyes**

Team Member Names : **Jovan McKinney, Raymond Britton, Finnegan Barry**

Description of your Prototype / Data collected

Our idea is to have two packs of food mounted inside of the suit. On the outside there will be a button that activates the electronic pump to push the food to the helmet. The food will be in vacuum seal bags to prevent contamination. The pump will have a reverse valve to push food back into the bag when they are done eating so that there is no waste of food or bacteria growth in the tube.The pump will be easily accessible to the outside and the buttons will be large so that they are easy to press with the big gloves that the astronauts have to wear.Our project does satisfy the requirements and constraints for the most part except for a few ideas that we are not using anymore. For example we are not using pellets anymore, we are using a smoothie or protein shake instead. Our prototype is not working at the moment, that is only because we're tyng to find where air is escaping so we can seal it. An electric pump pushes air in a bag and that bag is in a bag that has the protein shake in and when the inner bag expands it will push out the protein shake through the tube. Our testing data shows that the prototype works but 100 percent of the time. The documentation does allow for replication because we include the items that we use for the project. It does not include the exact material we would use for the final project. The project in microgravity should be good because with a slight push with microgravity, it should move freely through the tube. The project does show cots because the tubing we will use can be bought by another company and for the pump you can use an aerator pump that other companies make as well.

Chatfield Senior High School HUNCH Program
George Poggemeyer & Rhett Long
Contact: Joe Bertelsen
jbertels@jeffco.k12.co.us

Food Dispensing Apparatus

March 22, 2021
Purpose: To design a mechanism that consistently dispenses food bites to the astronaut without inhibiting mobility and vision.

Rhett Long and George Poggemeyer

Compact

The dispenser body is designed to fit 8 food bites in as compact and simple a way as possible. The opening and spring-fed dispensing style allow for easy retrieval of food bites while restricting the field of vision of the user as little as possible.

Adjustable

Heavy-duty twist-ties allow the user to manipulate the position of the food-bite dispenser as well as still bite food out of the dispenser. Magnets on both sides of the glass allow for the user to manipulate the position of the dispenser in the helmet during or after use. An extruded handle on the exterior of the helmet makes for easy use.

Easily Reloaded and Cleaned

The posterior of the dispenser is removed with 2 easy movements for easy food bite replenishment. The force of the spring which pushes food forward helps the backplate retain its position. This removable plate also opens up room to clean the interior from any food leftover from use.

Cad Drawings

Dispenser Body

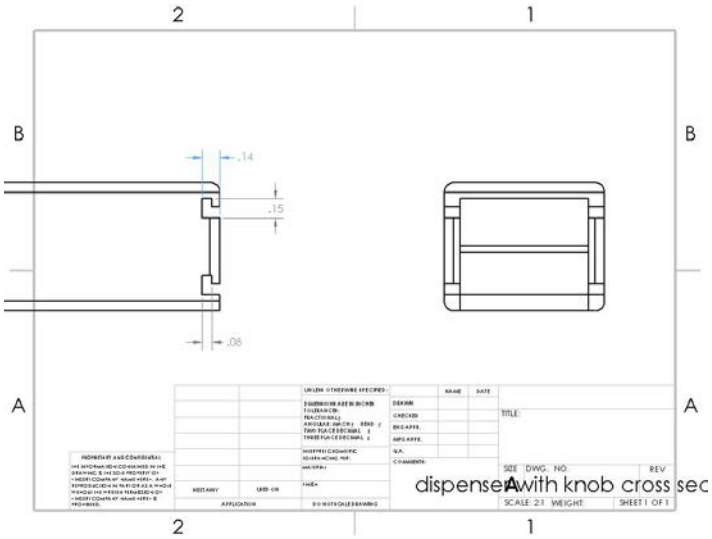

Removable Posterior

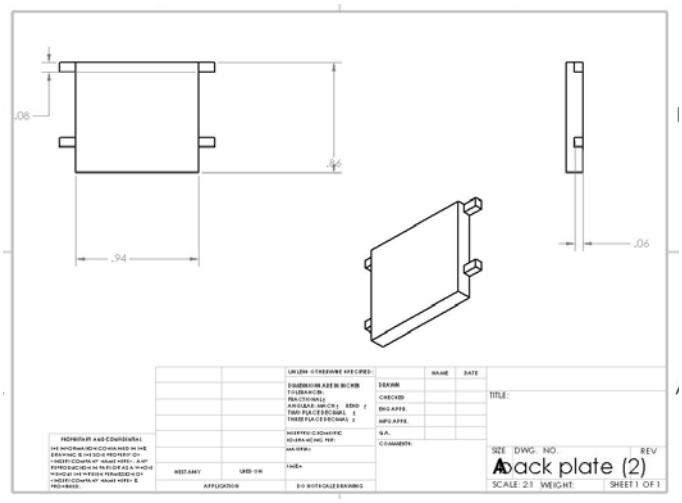

Magnet Holder

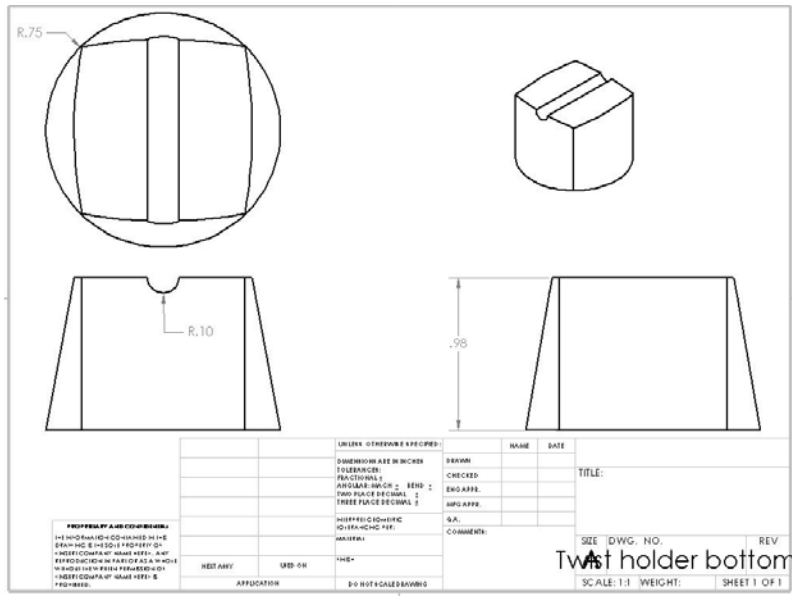

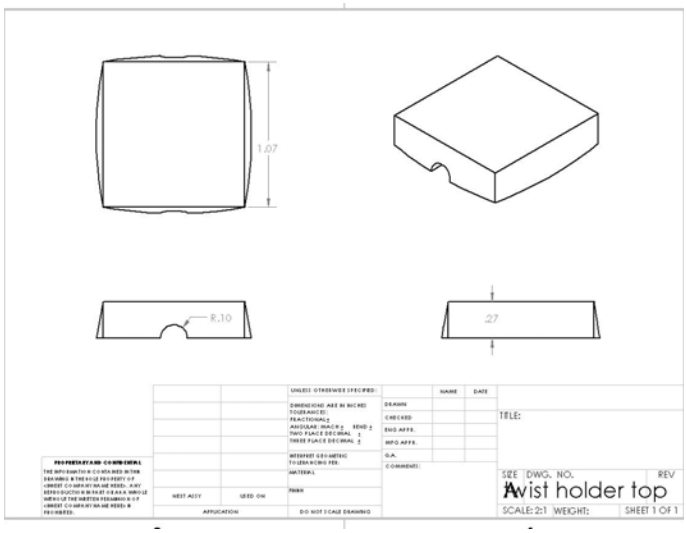

Magnet Handle

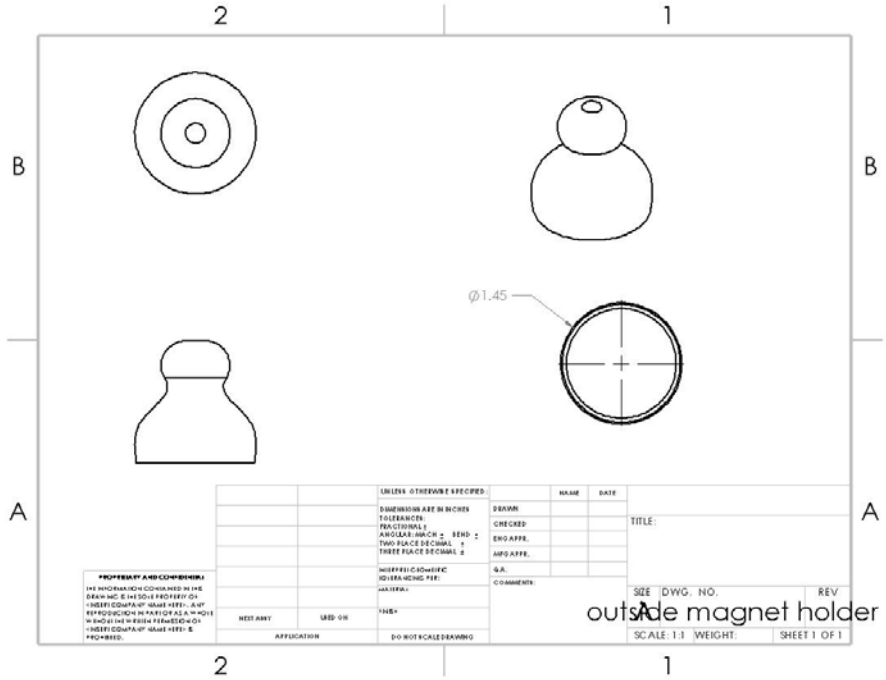

NASA HUNCH
Critical Design Review

Project: **Food Bite Dispenser**
School Name: **Space Coast Jr/Sr High School**
Teacher: **Mr. Luis Reyes**
Students: **Savannah Ogletree, Sydney Watson, Leah Edmondson-Wood**

Description:

Our prototype is resembling a harmonica holder with a little shelving similar to a magazine holder. To further explain, we used floral wire to act as the neck strand of the harmonica holder. We then used a poster board to act as the holder of the food bites that we decided would resemble thin bites that would be stationary in their compartments. We have a thin layer of crystalized honey to keep the food bite inside the magazine holder. The idea is that the honey will disintegrate at the touch of the tongue's saliva and also give the astronaut sugar to provide energy. The size of the energy slabs would be 1” x 1”, while having the height of a quarter. With the design, an astronaut would not have to use their hands and other common acts of mobility. The only movement that would be required is the movement of one’s tongue to dissolve the honey layer in front of them. The thin strap around the neck allows for easy movement of the neck, while also satisfying multiple shaped and sized necks and heads. To further explain our ideas, the Solidworks renderings attached below and to the provided PowerPoint show how the strap will sit and maneuver around the back of the neck. Each slot within the horizontal magazine will contain a bite, and a crystal honey layer which is demonstrated throughout the Solidworks assembly. Before putting on the astronaut helmet, the astronaut would wrap the neck strap around the neck, and comfortably place the horizontal magazine in front of the mouth. Due to the small amount of materials, the design would be easy and comfortable to use, while also not adding much of a burden to their already full schedules.

Due to the current pandemic, it is rather difficult to have multiple people testing a food type of project. Though, the three of us have tested it through multiple days to see how the project would wear down and keep intact, which worked out well. The design fits well no matter what size neck, shoulder, and head one has. Since the design is rather simple, if one is a visual learner it would not be too difficult to recreate our design. It is up to personal preference if one would want to scale up the design or scale down the design to make it more compatible with everyday activities. With microgravity, we have decided to make a fitted, rectangular food slab that would not move in the magazine slot unless purposely initiated. The entire project is intentional, meaning that nothing will move unless the astronaut wants it to. The astronaut will always be in complete control, and would have any issues working the prototype in the suit. Once the saliva is touched to the thin barrier of crystalized membrane, the food bite will be moved over towards the astronaut’s mouth, and would have nowhere else to go.

Our project does successfully incorporate COTS ideas because we purchased multiple PEZ dispensers so that we could see how the mechanism works. Even though we did not end up going with the PEZ dispenser idea it was still a part of our PDR. We wanted to use a harmonica holder for our CDR but after not being able to get one we decided we would make our own. We made it out of poster board, paint, and floral wire, so had to get creative and incorporate our ideas accurately. Though, for a more professional outlook, a true harmonica holder would be used in place of a morphed wire.

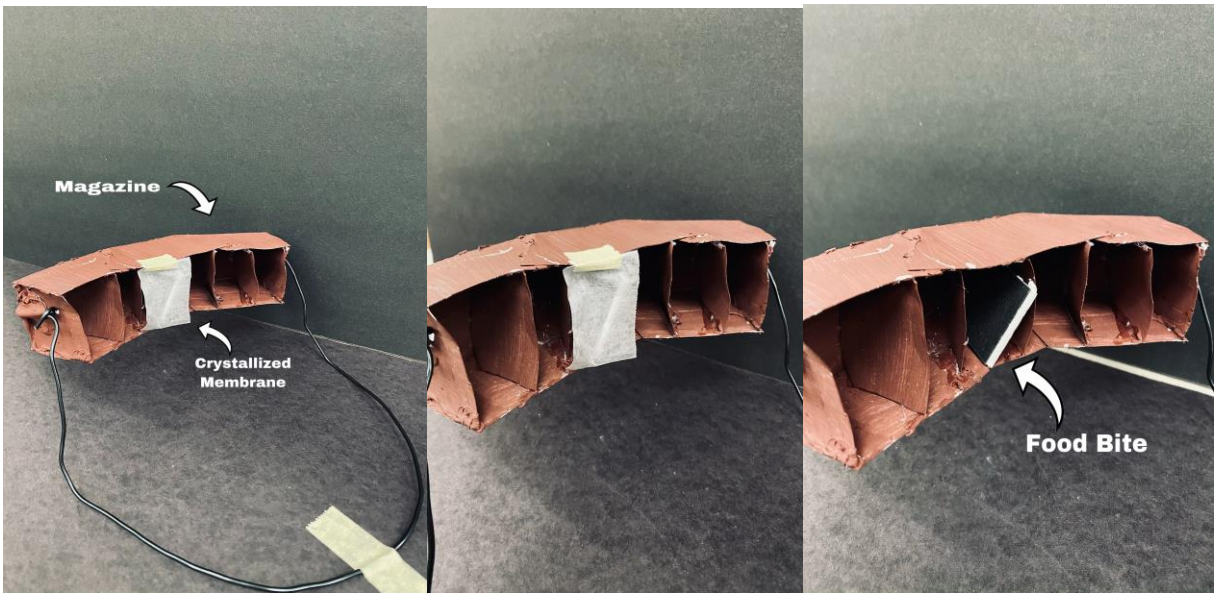

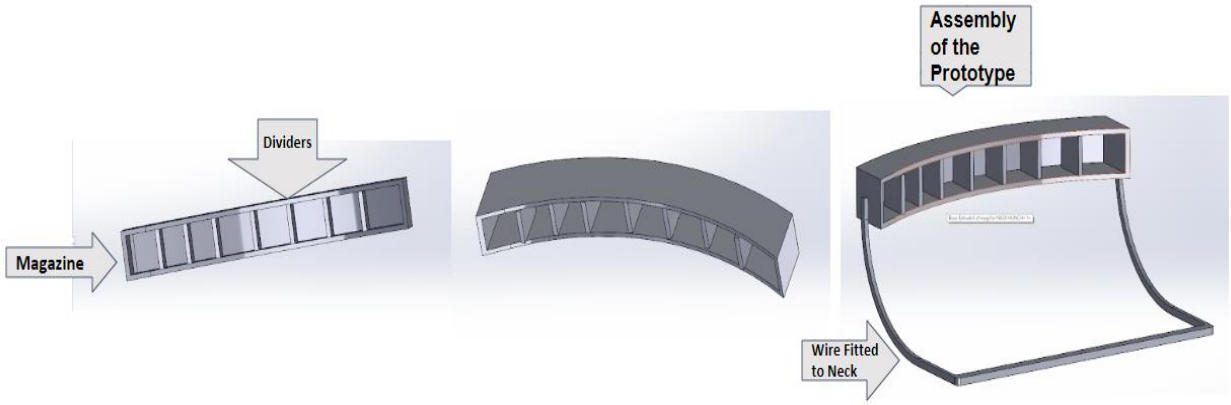

SwiftBite

School: Tri-County RVTHS, Franklin MA
Teacher: Mrs. Magas
Team: Dylan Carter, Ella Lallier, and Harry Anton

Project Description: The food bite dispenser is designed to release one food bite while blocking off all of the other bites at the same time. The dispenser uses springs to push the bites through the container and a rotating door to facilitate the single release requirement of the dispenser.

Spring: The spring is 3 ½ inches long and the diameter from edge to edge is .735 inches, and there are two springs in the dispenser.

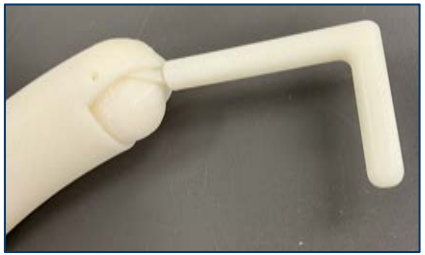

Rotating Door: Fits a single food bite inside and only allows one to come out at a time.

How to use the dispenser: Just push the lever and remove the food bite. It's that simple!

SwiftBite

Shape of Food Bite: The Spherical shape of the food bite makes it easy to fit in the dispenser and your mouth. The shape easily slides through the dispenser so it doesn't get stuck.

Attachment to Helmet: It's simple and easy to put together, fits to the helmets shape, and is easy to clean.

Attaches by velcro, WOW!

Screw Cap: A quick way to insert food bites and springs that also makes cleaning the insides easy.

NASA

HUNCH

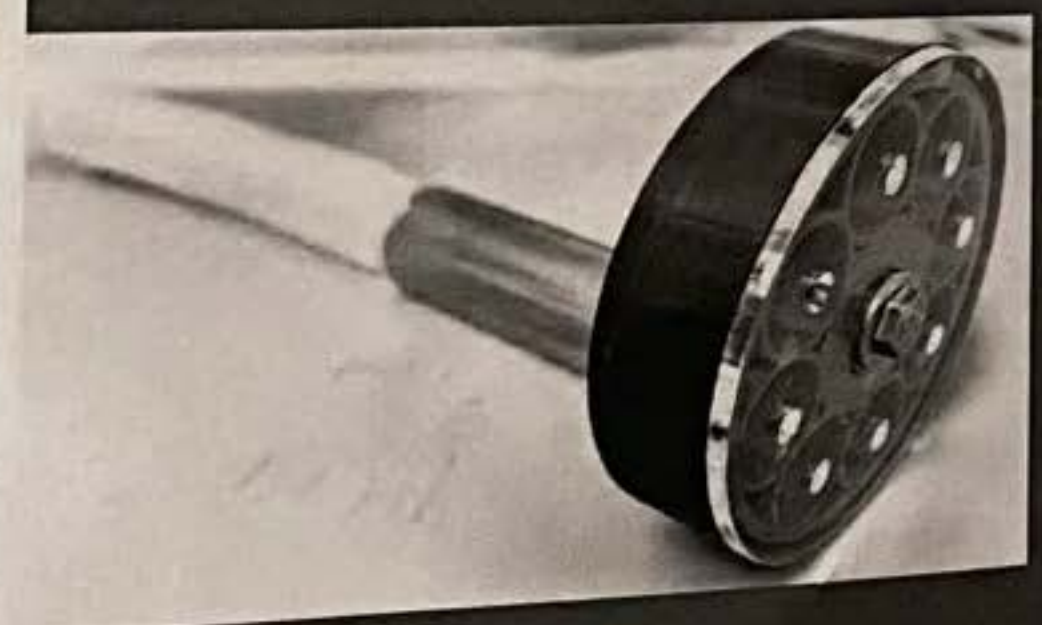

DESCRIPTION

We are currently working to create a dispenser that will allow the astronaut to get a variety of food bites while working on the moon. At any given time


Monday, March 8
ASUS
DEWALT

FOOD BITE DISPENSER

CREATED BY UDAY CHAUDHARY AND DAVID GARZA

CONTACT US

At Bridgeland High School
Our teacher is David Laughlin

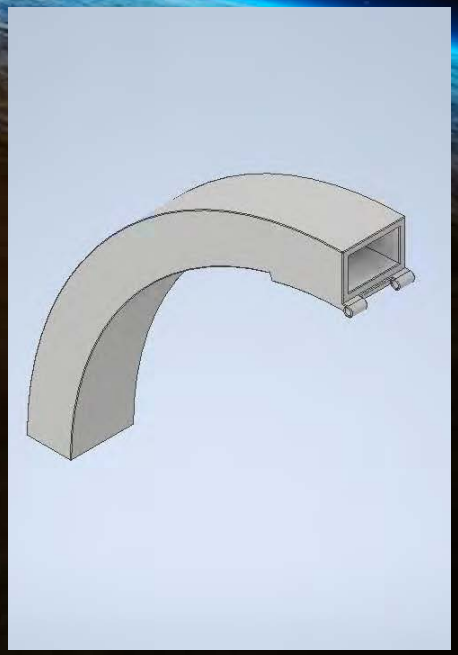

We welcome you to take a peek into our project that will aid in hunger with less time consumption while traveling in the cosmos.

Uday Chaudhary

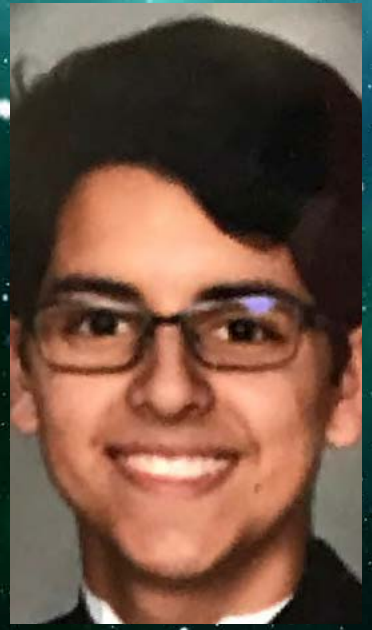

David Garza

We are creating the Food Bite Dispenser for our NASA HUNCH Project

ABOUT US

We are a 10th (Uday Chaudhary) and 11th grader (David Garza) taking the Engineering design 2 course at Bridgeland High school through CFISD connect.

We are using industrial technology like Inventor to aid making the 3d parts we need to creat a successful product to help you guys over there at NASA and most specifically the astronauts.

OUR WORK

Research

The Astronauts will be walking around on the Moon or Mars in their space suits for multiple hours at a time, because of that it might cause some hunger for them, so It would be valuable for them to have access to some kind of snack like a food bite to keep them focus on their work with full energy the astronaut which is why we have to create a dispenser so when ever they feel hungry rather than going back to their ship they can click a button which would dispense their food bite.

Description

We believe that a mag type dispenser will be the most easiest and best option for a food dispenser because at a push of a button your food bite will dispense straight into the mouth of an astronaut.

Food Dispenser

Matthew, St.John Valley Tech Center Frenchville, Maine

There is a need for a system that will allow astronauts to go on long space walks or expeditions without going inside to eat. Using energy bites, Hunch has tasked high school students with trying to come up with a product that they can use.

This is the design that we have come up with. After the preliminary design review, we changed our design to something that held more pellets in a smaller space. While we also wanted to incorporate a handle that could be pulled back to make it easier to refill the container, there was just not enough time to develop the idea completely.

Our group tried to keep our design simple and efficient, and going off of the feedback we received at the preliminary design review, we believe that this design is a great submission.

Using a curved design, we believe that this design won't interfere with astronauts vision and will be able to supply them with food when they need it. We used a spring system to refill the container, while also applying pressure in low gravity.

Original Design Plans

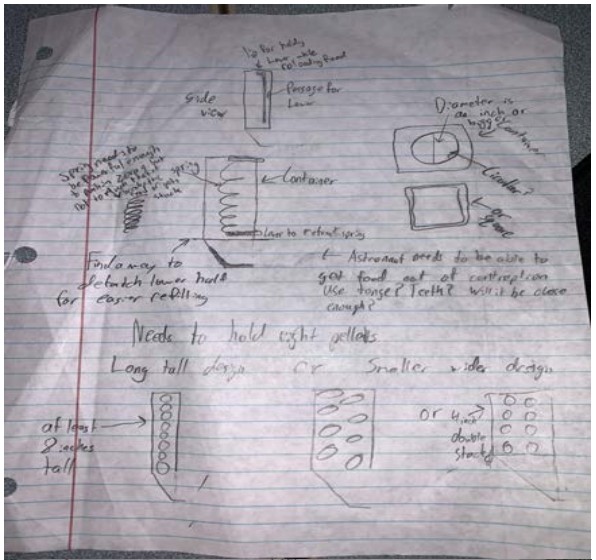

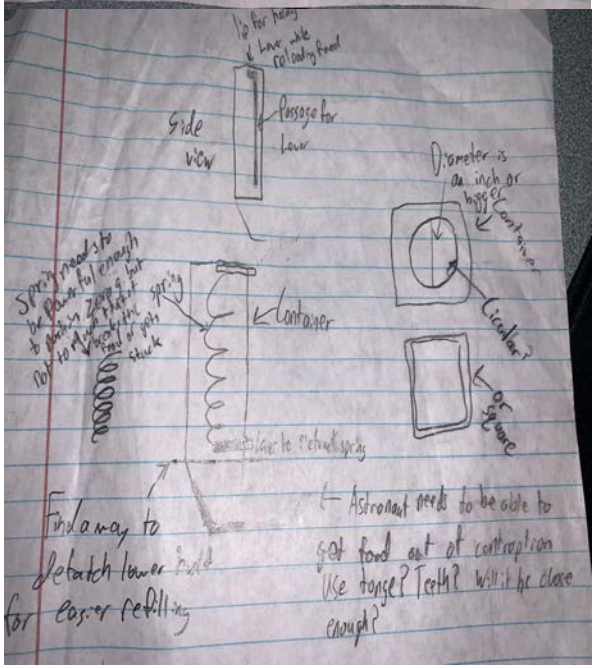

Measurements and Images

The supplier is 6 ⅛ inches long and 2 ¼ inch wide

The Supplier is two separate parts, the container and the spring mechanism. For our tests the spring mechanism was directly attached to the container with glue, however, having a mechanism that can be removed may make it easier for astronauts to refill the containers.

Food dispenser

School: Conroe High school

Teacher: MR. Canestorp

Description: to put the food inside the dispenser you reel in the spring using the spinner on the right. It works because there is a string in the middle spring and a ball on top that pulls the spring down when you use the spring. To get the food out of the dispenser you push the pusher on the top with our chin which pushes the food out.

At least 3 photos and one CAD drawing.

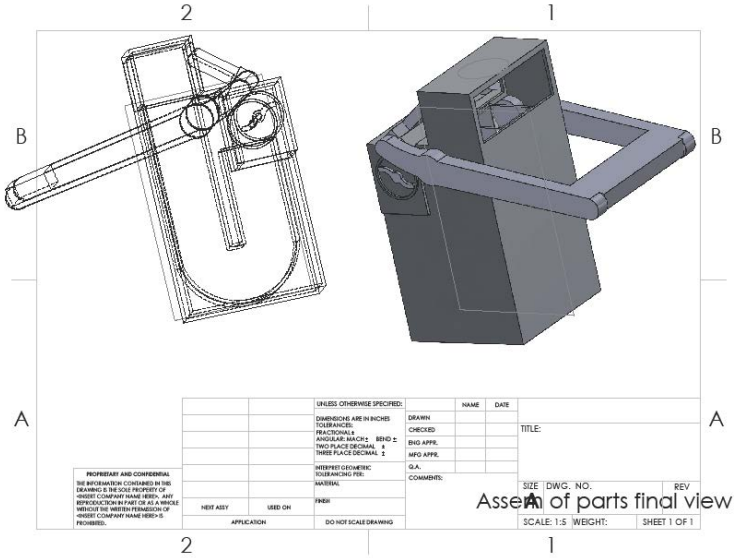

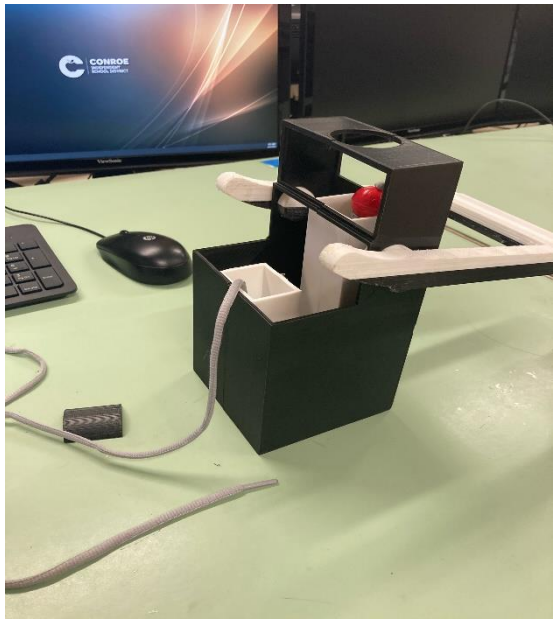

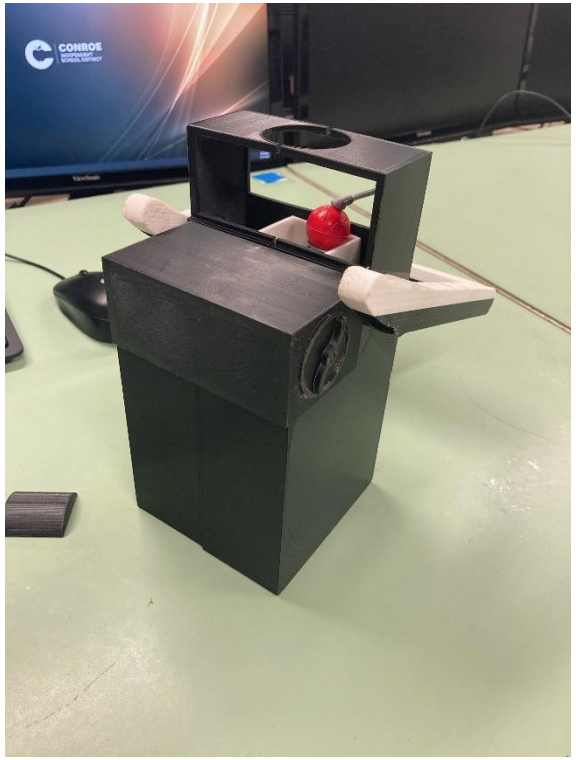

The Team:

Team Members:
Cade Scholtens, Rory Sullivan, Damon Dvorson

Coach:
Gary Duquette

Mentor:
Flo Gold

Food Bite Dispenser Team

F. B. D
Food Bite Dispenser

Jackson Hole High School
1910 High School Rd,
Jackson, WY 83001

Constraints and Solutions:

- Have to remove pellet from dispenser
  - Can not fall or shoot at person's face
  - Will be gravity so pellet won't be floating, but crumbs could be an issue
- Able to eat pellets without the use of hands
- Pellet size - 1" x 0.75" x 0.5"
  - Dictated by a good edible size, a shape that will fit through the dispenser and not get jammed
- About 8 pellets per cartridge
- Small enough to have 2 or 3 dispensers in the helmet
  - 2 snicker's bars worth of food

Overview of the FBD:

Design Viability:

1.) **Visibility**
2.) **Collision Safety**
3.) **Control**
4.) **Protection against accidental triggers and jams**

Test Description and Results:

- Pellets are removed without the use of hands.
  - will test the dispenser without hands. If dispenser malfunctions, it will fail
- Pellets have to be secured in the dispenser.
  - Shake dispenser. If any pellets dispense during shake, dispenser fails
- Hold 6-8 pellets
  - will count pellets in the dispenser. If the number of pellets is above 8, the dispenser will fail.
- The dispenser has to be able to be cleaned after use.
  - will clean dispenser after use, if it can't be cleaned, dispenser fails

SPECS AND GOALS OF PRODUCT

NASA Hunch Finalized Problem Statement:

NASA Hunch Astronauts in August 2020 tasked us to design a food bite dispenser small enough to fit up to 2-3 in a helmet. These astronauts have reported that they work 6-8 hours in space, the moon, and mars and will not have the energy to work efficiently in both the mental and physical aspects.

- Pellet size is around 1" x. 75" x .5" (a little smaller than a fun size candy bar)
- Holds around 8 pellets per cartridge
- Must be able to eat all of the pellets without use of hands.
- May be small enough to have 2 or 3 different dispensers in the helmet—around 2 Snicker's bars worth of food
- Person has to remove pellet from dispenser, can't fall of in the helmet or shoot at the person's face.

DESCRIPTION OF PRODUCT

THIS FOOD BITE DISPENSER IS AN EXCELLENT FIX TO THE HUNGER PROBLEM ASTRONAUTS FACE OUT ON MISSIONS. IT IS MADE FROM TOUGHER PLASTICS AND METAL WHICH PREVENTS IT FROM BREAKING EASILY AND INCREASES DURABILITY. THE DESIGN IS FAIRLY SIMPLE YET ACCOMPLISHES THE GOAL IT WAS SET ON ACHIEVING. IT USES A SPRING (TENSION FORCE) TO DISPENSE THE FOOD BITE PIECES. THIS PRODUCT WORKS BEST WITH CYLINDRICAL OR SPHERICAL FOOD BITES, AND IT MEETS ALL OF THE SPECS REQUIRED.

WHAT WE CHANGED AND WHY

Our concept model and functional prototype are different because we decided to make changes once we saw how the concept model came out. We realized that there would be problems associated with the size and shape of the design. It would be too bulky and get in the way of the astronaut's face. The ramp that was initially apart of the design wouldn't work like we thought it would, so we decided to keep the general idea of the concept model, but modify it to prevent further problems from developing. As a solution to the size and shape, we made the prototype smaller and instead of being more cubic, we made it cylindrical.

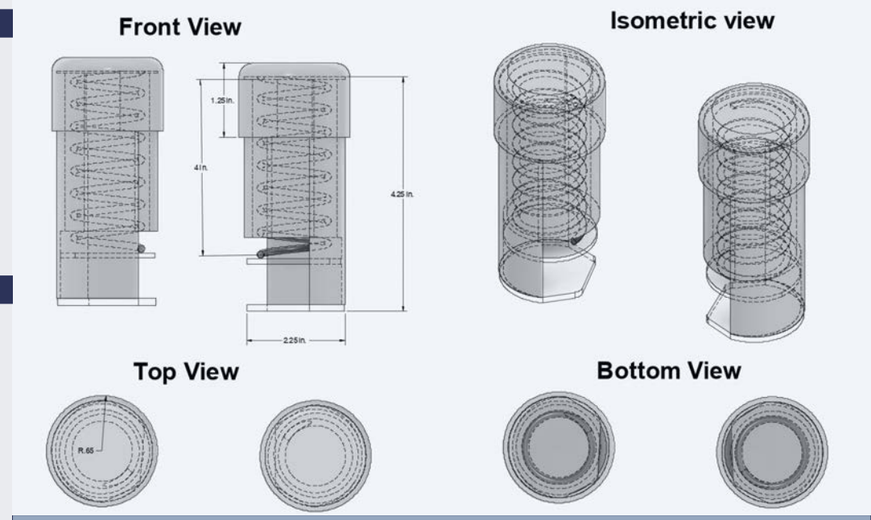

CAD Drawing + 3 photos

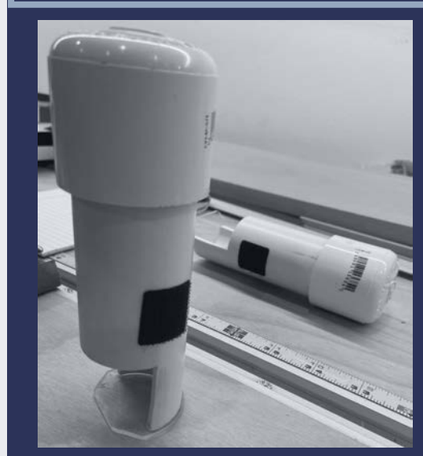

The prototype with the cylindrical shape is our new finalized prototype that is fully functional. Initially, we were going to go with our more cubic-shaped concept model shown below but there were too many issues with it. We kept the same general idea because that was what we felt would work best and just decided to change the shape and materials used. Our new/improved model is much more simplistic and completes the task at hand with fewer complications.

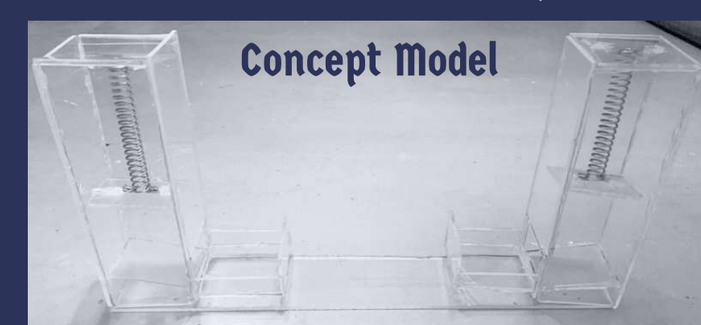

FOOD BITE DISPENSER

Manvel High school NASA Hunch Brochure

School: Manvel High School

Teacher: Mr. Smith

MAVERICKS

Website

For further information please go to the website listed below. Here you will find all of the processes used to create this product as well as information gathered to help guide us in our creative process. You will find all of the work that took place in order to ensure the success of this product.

https://spark.adobe.com/page/b2l6Fbb5hMSKb/

Zion

Austin

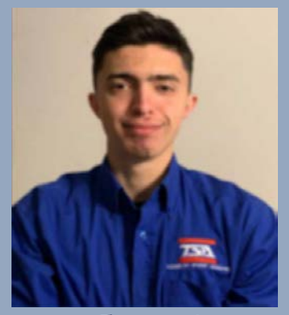

Chris

Team Members: Zion Johnkins, Austin Axtell, and Christopher Saucedo

~ Zion Johnkins- will attend Rice University majoring in Mechanical Engineering

~ Austin Axtell - aspires to go to the University of Houston to major in Computer Engineering

~ Christopher Saucedo - aspires to go to the University of Houston to major in Data Engineering

DESIGN COMPONENTS:

Component 1: Dealt with researching

Component 2: Dealt with sketching and CAD Design

Component 3: Dealt with Material selection and Prototyping

For more information go to the website page

Food Bite Dispenser

F.B.D.

East Troy High School

Description

This design is a sleek rounded dispenser that needs no trigger to function. It hold up to 8 spherical pellets of food and is easy access to astronauts. It has a hook on the back for easy cleaning and removal, as well as a magnetic flap to hold the contents within the dispenser. When not in use, the food is at the ready to either side of the astronaut. This makes for easy access and faster dispensing times which allows for more research outside of the space station. Plunger is made wide enough to avoid jamming for a no-touch- needed food dispenser.

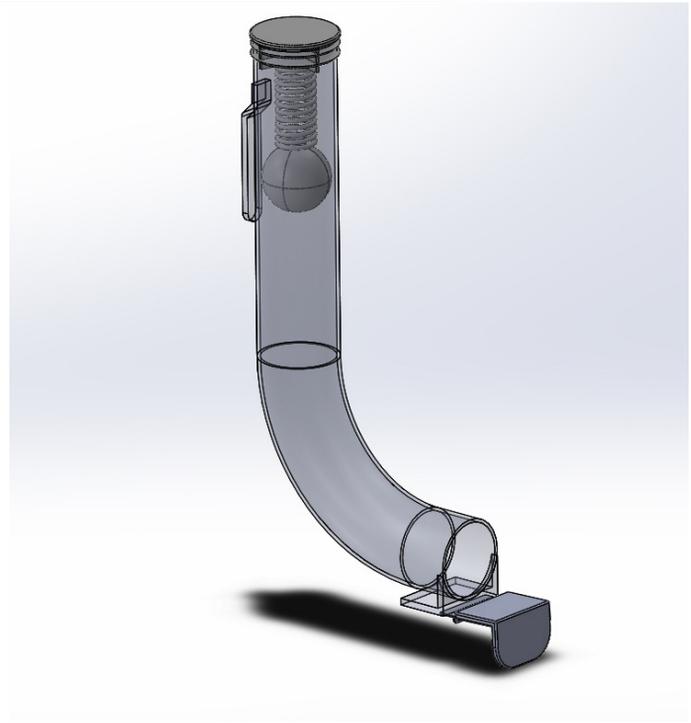

Questions?

Don't hesitate to email us!

Student Contact:
nataliegoetsch23@easttroy.k12.wi.us

Teacher Contact:
manrya@easttroy.k12.wi.us

Teacher: Manske

Students: Natalie G, Kristen H, Becca B, Delaney K, Alyssa S and Teagan B

Our Product

MAINTENANCE

To refill, simply lift off of back hooks and dismantle top cap to empty contents. Use flexible tool to clean out inside by gently brushing tool along the inside of the device. Make sure to clean all areas of the device as to not cause jams. Reconstruct and place back onto hooks inside helmet.

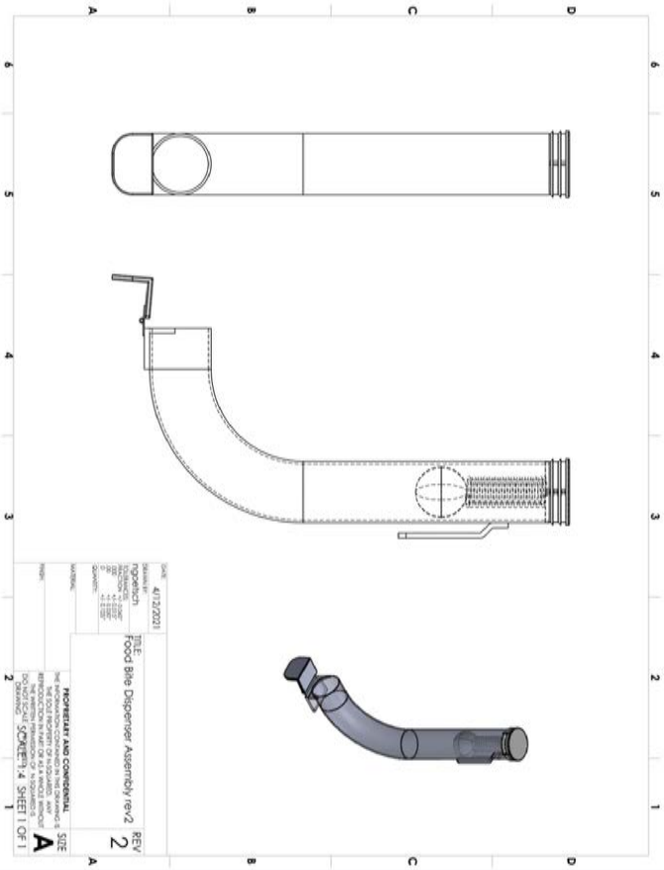

ASSEMBLY AND USE

To assemble, take spring attached to the cover and attach is around the out-cropping on the small plunger. Then, after inserting the desired amount of pellets into the dispenser, put the plunger into the the bacl after inserting desired number of pellets, and closing the lid tightly. Then, using the hooks on the back of the dispenser, hook back into either side of the helmet. The dispenser is now fully loaded and ready for use. To use, simply turn your head over to lever, and push down, dispensing a pellet.

PROBLEMS AND IMPROVEMENTS

To improve our product, we would curve the mouth of the chin lever, so make sure that the pellet will not fall out, as well as find a better way to attach the plunger to the cover.

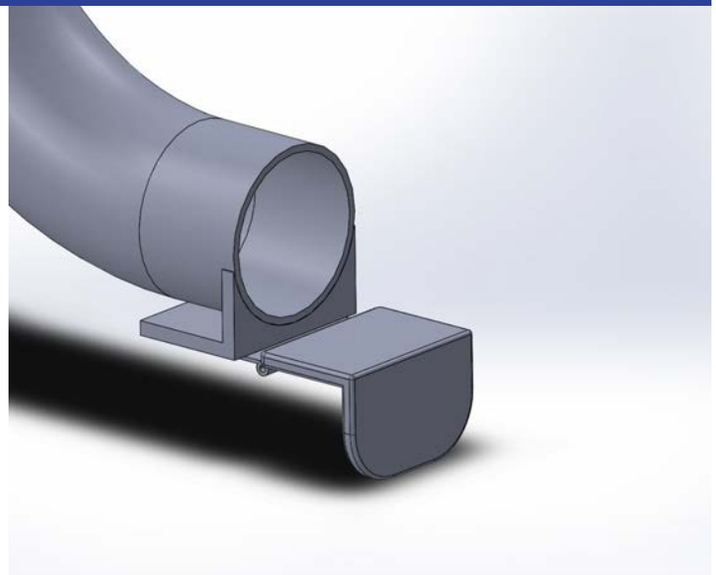

Food Bite Dispenser

School: Ranger High-Tech Academy (RHTA)
Teacher: Coach DeSciscio
Group: Logan, Carter, and Kayden
Description: Our groups task was to come up with an idea for astronauts to be able to eat food while in their spacesuits. The astronauts will get hungry while in their suits all day so we have to be able to fit up to 2 snickers bars of food in our product. Our idea is to have container sit against the side of the helmet that has a string of food attached. The string of food is the food for them to eat almost like a twizzler. The astronauts would be able to bite the string and eat the amount of that they want without the food getting in their way.

Diameter: 3inches
Height: 1.5inches

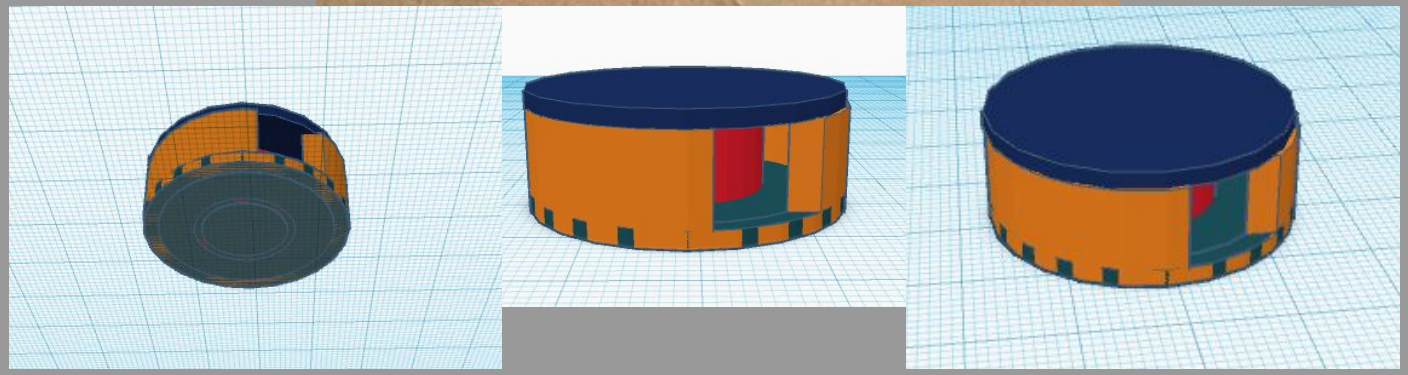

Convenience and comfort, all in one compact and simple design.

VISIT OUR WEBSITE FOR MORE INFORMATION

https://sites.google.com/view/nasahunchproject/home

FOOD BITE DISPENSER

Elika/Dominic/Mateo/Gabby

WHO WE ARE

We are 4 students. Elika Jahvani, Mateo Pastorini, Gabriella Moran, and Dominic Blackmon

We have designed a food bite dispenser that will solve the eating issue for space trips.

FOOD BITE DISPENSER

CONVINIENCE

There is no need to use hands when you have the device inside of your helmet, ready to dispense food into your mouth

COMFORT

With the added comfort, it makes what was once a dream now possible

COMPACT

The dispenser is small enough to fit in a astronauts helmet, making it the ideal solution