Lunar Dust Blower
Honorable Mention
for
NASA HUNCH
Design and Prototyping 2021

Congratulations for being chosen to receive an Honorable Mention for NASA HUNCH Design and Prototype 2021. This is to provide more praise for those who have done significant design and testing. Take pride in knowing that your work demonstrated many significant innovations and ideas. HUNCH recognizes that your team put a lot of thought and time into your design and testing. You had multiple prototypes you worked through, completed several interesting ideas, did testing with each prototype, demonstrated a deeper knowledge and skill in CAD.

Although you are not being invited to the Final Design Review, your work will remain on the HUNCH design and prototype page where it will continue to show the hard work your team put into the project.

Critical Design Review – NASA HUNCH

Project Title: **Lunar Dust Blower**

School Name: **Space Coast Jr/Sr High School**

Teacher: **Mr. Luis Reyes**

Team Member Names: **Dalton Sams, Aiden Arrington, Arrianna Brown, and Cyrus Coulter**

Description of your Prototype / Data collected

The lunar dust blower prototype we have created is based off of a Kobalt electric snow blower. Unfortunately, we could not purchase this snow blower but our design is solely based on it. We have taken the design of the snow blower and made some modifications to make it suitable for the environment and conditions on the moon. We created a 3d prototype with a scoop-like blade that will pick up the dust as it moves through a metal grate on the front of the dust blower. The dust will then be thrown to the location it needs to be. Since we cannot make the prototype electric, we have put the blade and wheels on the same axel to allow the dust to be picked up as it's rolled. The prototype we've made also has an adjustable handle to make the product more efficient in terms of storage and use for people of different heights. Lastly, the prototype will not be made of the material that would be used but will be silver to represent this quality. The materials, along with other parts we could not include, will be discussed as we are presenting the prototype.

Most of the structure of the dust blower is quite similar to that of the snow blower. Most changes made were made to withstand the temperature and meet the constraints needed for the problem. We didn't really make any changes in terms of the microgravity on the moon because there are no loose components inside of the snow blower. With this structural advantage, microgravity should only truly be a concern when the dust is thrown onto the habitats. Although the structure of the two products is similar, there have been changes made to the materials as well as additional features to meet both the criteria and constraints of the problem. Most of the criteria can't be shown as they would really be but will be manually shown or discussed. An example of this is how the machine would actually run. We unfortunately cannot make the prototype electric but can manually show how the interior parts would function in a final product. To meet the specified constraints, we have added things such as a wire grate to the opening of the dust blower and a heat sink to the motor to ensure that everything works as it needs to be.

As we have been completing our prototype, we have been documenting our progress through pictures and descriptions. We have labels on our prototype that show what kinds of materials were used in the making of it. These will allow for the prototype to be recreated if it is needed. All of our drawings show what each part will be and what is will do for our problem. The descriptions that go along with it further explain the parts and materials. As for testing,

we are testing the functionality of the blade and the rest of the prototype separately. Due to the proportions of the different parts of the prototype, it would be very difficult to test them together and have an effective result. The blade alone will show the success of the design even though it is not actually attached to the rest of the prototype. This information will be fully documented to show the results of the testing.

<u>Photos of your prototype with labels (If no prototype – summary of testing data Brief descriptions / data collected)</u>

Original Prototype

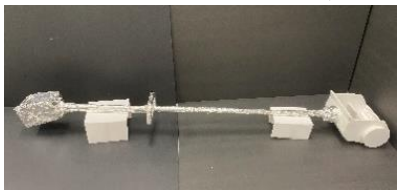

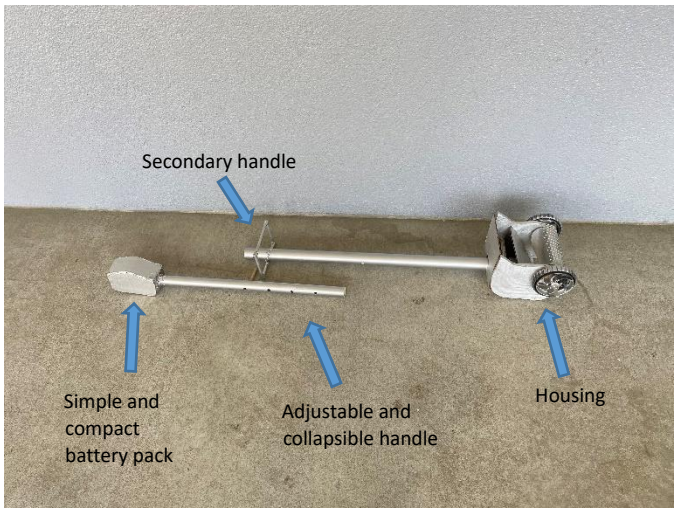

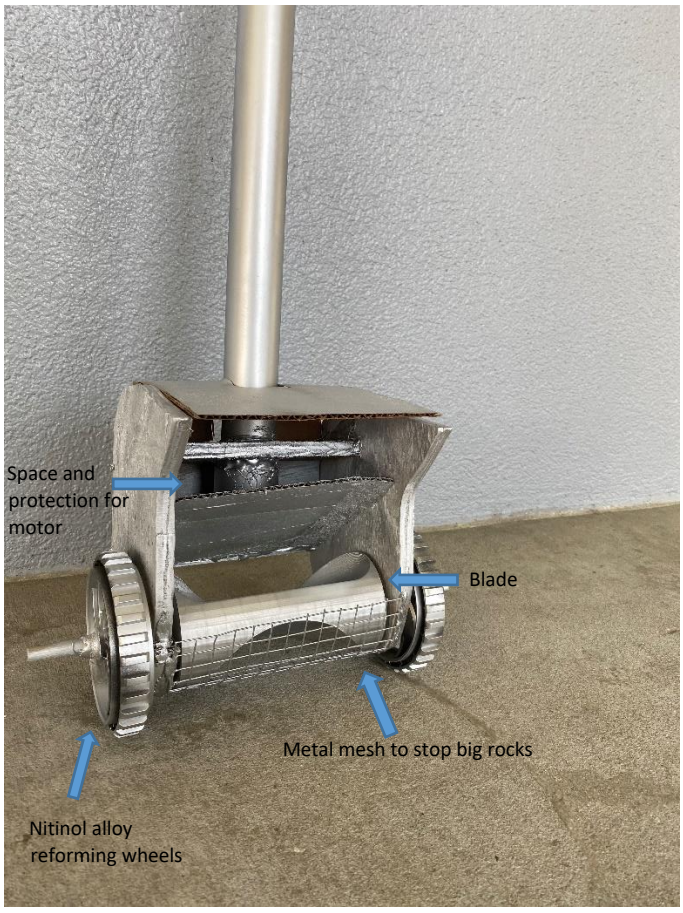

Moon Dust BLOWER

Group Members

Ethan Le 0001080987@ccisd.net
Chancellor Johncock
100000748@ccisd.net
Aaron Edwards 0001085524@ccisd.net

Clear Creek High School 2305 E Main St,
League City, Tx. 77573
For: Robin Merritt, RMERRITT1@ccisd.net

OUR DESIGN

01 Adjustable chute with an 180-degree range to allow the astronauts to shoot the dust in the desired location

02 Trigger like handles which make the snow blower easy to use for the astronauts in their bulky suits

03 Heat sink that is connected to chute which uses the cool moon dirt that passes through the chute to cool down the heat sink

04 Cow catcher similar to one on a train used to filter out large rocks that could damage the habitat

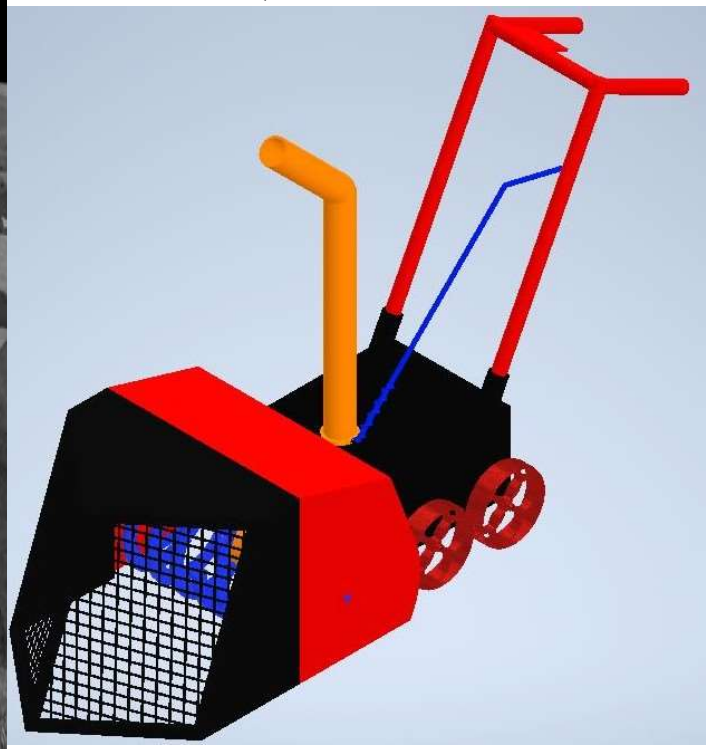

Problem Statement

In future mission, on Luna, the astronauts will set up habitats for themselves. These habitats need layers of moon dust to block out radiation. Our team needs to develop a way to transfer this dust. This device will need to be able to withstand the environment of Luna and it must be electric. Our focus will be more on the modification of an existing design than the creation of a completely new one.

CAD MODELS

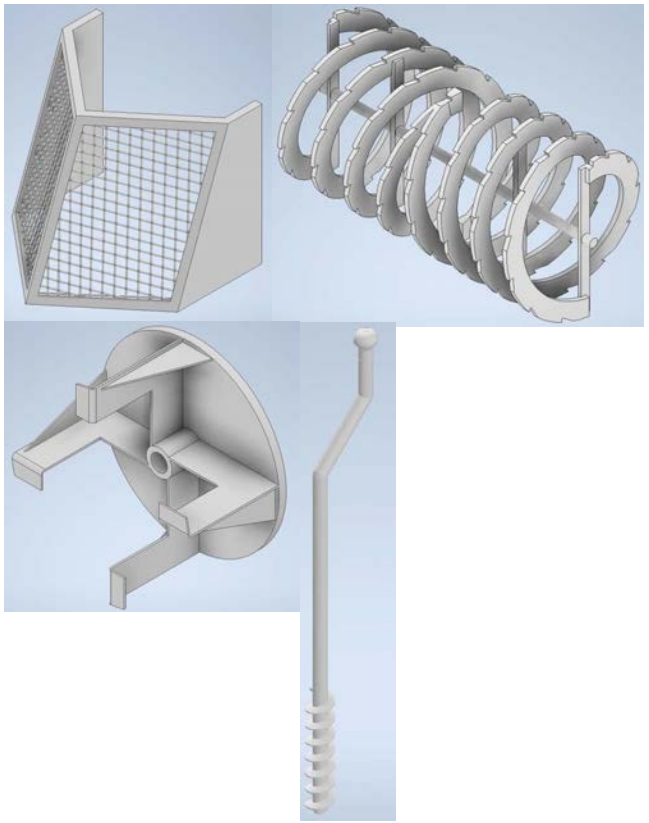

JUSTIFICATION

THIS BLOWER IS NEEDED FOR COVERING THE LUNAR HABITATS WITH MOON DUST. THEY NEED TO BE COVERED BECAUSE THE HABITATS ALONE ARE NOT CAPABLE OF BLOCKING OUT THE REQUIRED AMOUNT OF RADIATION AND THE DUST CAN MAKE UP FOR THAT SHORTCOMING.

CALCULATIONS AND EXPLANATIONS

In order to throw material, the best possible range and height, the chute will have to be at a 45-degree angle, and it will have to have a second stage impeller that goes roughly 1000 rpm. the first stage's auger will have to go roughly 100 rpm so that a good amount of material reaches the impeller. this dust blower will have to be used for a long time and so steps must be taken to ensure that the least amount of damage occurs. besides using tougher materials, a cow catcher made from grating with gaps no larger than .25in. would prevent any large debris from damaging the blower and the habitat. the blower's chute will also have to be capable of rotating at least 180-degrees to facilitate easier use.

ENVIRONMENT

Luna's Environment –
The surface of Luna is covered in a very fine dust that acts like sand grain-sized shards of glass against objects and because of this, metal is our only option. The temperature extremes are also an issue; -250° to 250° Fahrenheit.

Environment Counters –
A heatshield and heatsink are needed to counter the extreme temperatures on Luna. The heatshield will be positioned to also act as the heatsink. This piece will be like a box over the motor and it will have enough contact with it to leech of heat. The chute of the blower will be incorporated into the heatsink to add surface area. This allows for collected heat to be transferred to the lunar dust travelling through the chute. The electrostatic charge generated by the lunar dust will cause the dust to stick to the blower and this will cause malfunctions and/or reduced efficiency. Nasa is developing an anti-static coating that could prove useful in countering this problem.


Champion
USA

Mobilization

For this dust blower to be effective, it must be able to move easily and reliably. It doesn't make much sense to send a whole other motorized vehicle to the moon, as it would add another vehicle to maintain, as well as adding millions of dollars to send a heavy motor. We will instead have the dust blower towed by the rover. Skis will be used instead of tires to minimize moving parts.

BILLINGS
CAREER CENTER

2020-2021

Nasa Hunch

"Dust Blower"

Billings Career Center

Tristan Peter and Taylen Hawkins
Mr Anderson

Moving Dust

One rather large challenge we came across was how to move the dust and how to sort out rocks over 1". We added a wire mesh over the front that doesn't allow rocks over ¾" through. However long term use of this will cause damage and will eventually need to be replaced. I designed a grinder inspired by a pencil sharpener that will break up any rocks that are over 1" in diameter. Unfortunately, we were not able to get the parts necessary for this piece, so we still have the grate. Ideally, we would have this grinder installed and the prototype would be a 2-stage snow blower. We also have a bucket to store a small amount of dust.

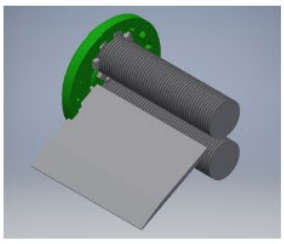

Tristan Peter 2021

Final Prototype

CAD Prototype

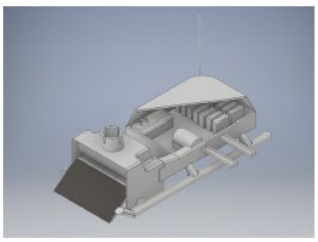

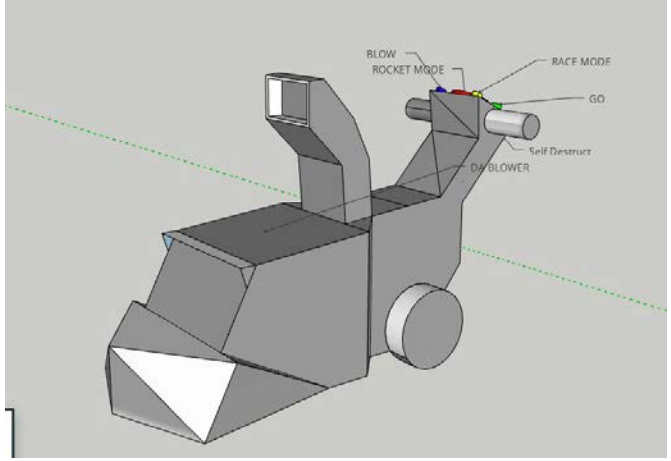

Our blower is able to scoop the dust from the ground with the rubber auger and will not throw rocks bigger than 15 millimeters because of the grated plate that is on the back of the auger housing, which is completely sealed. Which that then leads to another grate that is 10 millimeters which will be able to take out any rocks that somehow made it through the first grated plate. The rubber auger is able to move up and down depending on the ground level so you don't pick up any extra rocks. The plow in the front is a great addition as well to push away any large rocks that may get in your way.

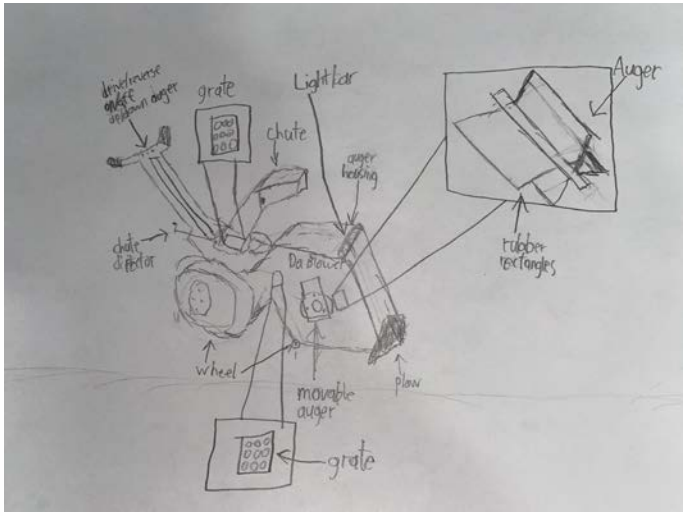

This is our rough design for the beginning of our snowblower/ dust blower

The idea of a regular snow blower is what we are looking at but with a few alterations. The will be an extension to the top of the blower that goes all the way around the rubber auger that will be able to move up and down depending on the terrain the astronauts are in. The completely sealed inside will have a vacuum that will suck all the dust into grated chute that will keep out all the rocks and pebbles that will harm the lifepods and blow out the dust with ease.

Dust Blower

By:Branodn Ringuette and Kaleb Baron/ SJVTC
Teacher: Mitchell Daigle

- We have to figure out how to move the dust efficiently without getting space dust all over the astronauts and the Space Pods.

The blower has a manual and extended chute that helps save the battery and is easy to move back and forth to blow the dust where every you would like. We have changeable batteries to be able to get more done during the day so you can charge a battery while using a battery.

Parts List for our Blower

- Snowblower
- Rubber liner
- Thick Rubber Pieces
- Metal Auger Rod
- Sheets of metal for auger housing and plow
- Small pair of skis
- Small LED light bar
- Screws and bolts
- Aluminum shoot
- Two metal skies
- Tires or tracks

Criteria and Restraints

- 15mm diameter holes for the grate
- Plow in the front of auger housing to move large rocks out of the way
- Seal and vacuum in the auger housing to chute to move the dust out
- Large rubber rectangles on the auger to scoop dust
- Changeable and rechargeable batteries so that you can charge a battery while using another one using solar powered energy to charge.
- The Chute has to be directed manually to save battery

NASA HUNCH RADIATION PROTECTION

SANDBAG STRUCTURE

CREDIT: CALEARTH SUPERADOBE STRUCTURES

MAIN BENEFITS

The benefits of the sandbag structure includes its; safe handling of lunar regolith, size efficient bags for storage and transportation, maximized soil protection, security of regolith, sturdiness of structure both externally and internally, forming and simple geometry, and exercise opportunities for the astronauts.

BAG DESIGN

The size of the individual bags are dimensioned such that it feels like lifting 20 pounds on the moon. Since lunar gravity is 1/6 of the gravity on earth, the **bags are dimensioned to hold 120lbs of lunar soil on the moon.** With a desired length of 30 in for easy handling, we calculated that the **radius of the end of the bag would have to be 4.85"**, or a 9.7" circumference.

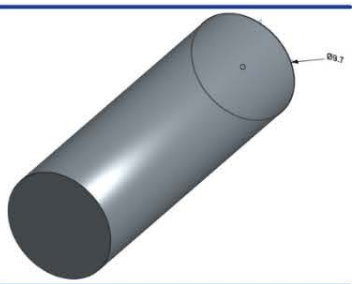

BAG MATERIAL

Material research was conducted with the priority of being able to block gamma radiation.

Two of the options narrowed down is **kevlar**, and **Nextel**.
Kevlar is our prioritized option because it is a strong synthetic material, heat-resistant, and also can **block radiation** using a certain amount.

Nextel is a ceramic fabric that is stronger than aluminum, fire resistant and is able to withstand meteoroids. Nextel is used on NASA's Space Shuttles and keeps satellites from getting demolished.

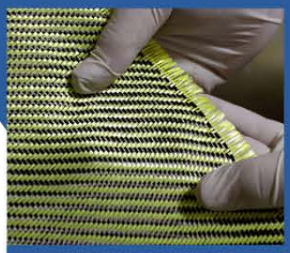

SOURCE: FIBREGLAST

SOURCE: NASA

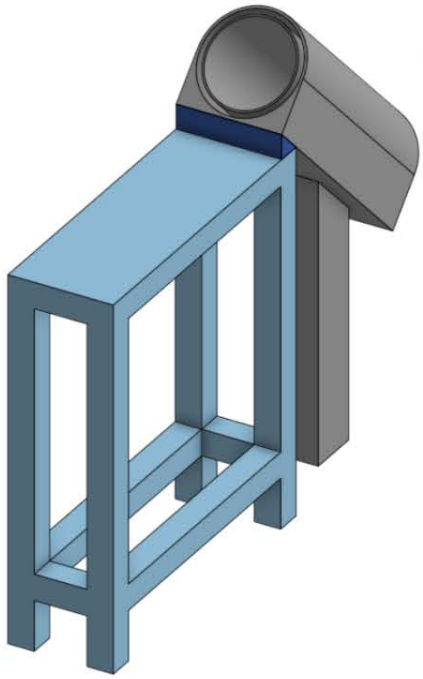

FILLER STATION

The filler station is designed for the restricted mobility of the astronauts. The gray component acts as the direct holder for the bag, (similar to lining a trashcan) allowing astronauts to do the work without having to bend at uncomfortable/impossible angles.

CLOSING THE BAG

Closing the bag should be easy and effortless for the astronauts because of the restricted movement of their gloves. Having a drawstring at the end of the bags is a simple and affective way for them to achieve this.

Attaching the bags to each other can be done through layering hooks/barbed wire in between each layer of the bags. The hooks along the wire can be small enough to catch the bag, but not big enough to tear them. Like a fishing hook.

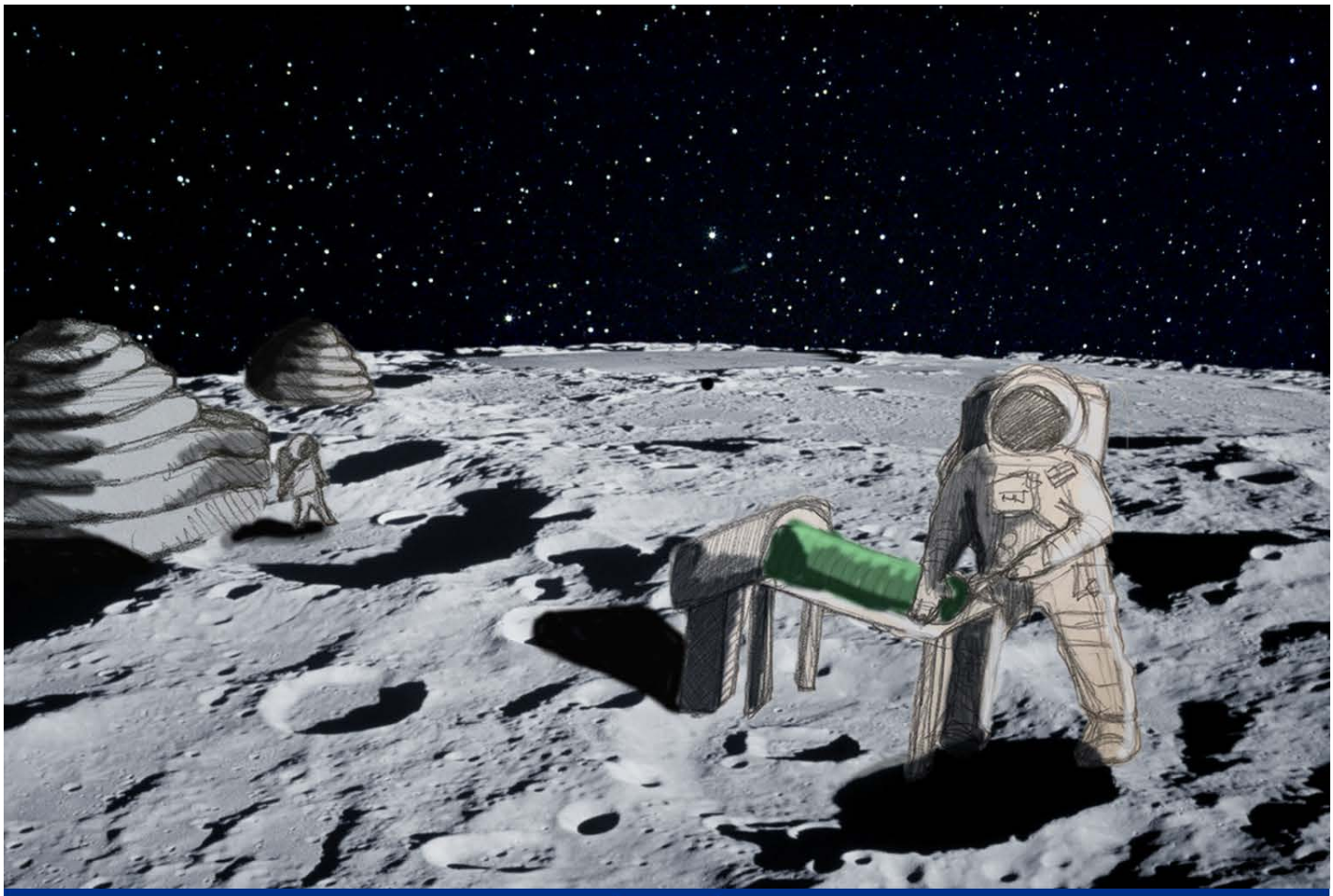

RADbags

Pictured from left to right:
Austin Harris, Stella Vickland-Davis, Carlos Nava-Gonzalez

Lunar Dust Blower

Objective: Make a device that can get lunar dust on inflatable habitats to help protect them from harmful rays.

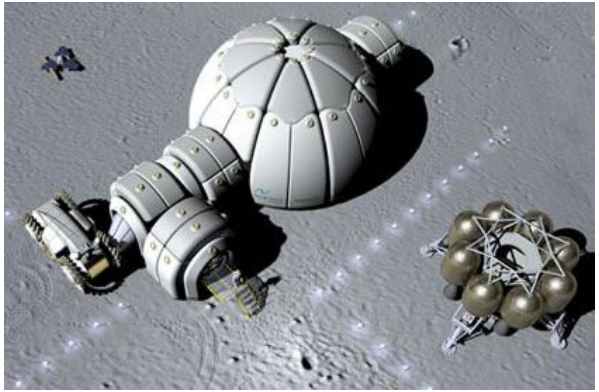

Group Photo

Members: Aidan Manske, Dylan Politoski, and Kyler Newkirk

Teacher: Mr. Manske

Battery Pack:
It will have a battery pack that would allow the dust blower to operate without having to be wired to a separate source.

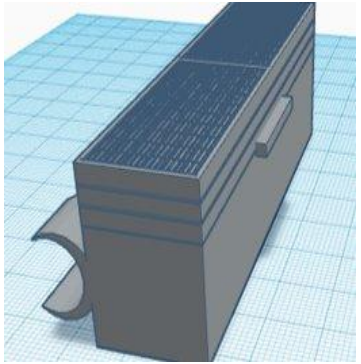

Airless Wheels:
These wheels are airless so that they can be used on the moon since the moon doesn't have an atmosphere. They are also wider so that it's harder for them to sink into the ground.

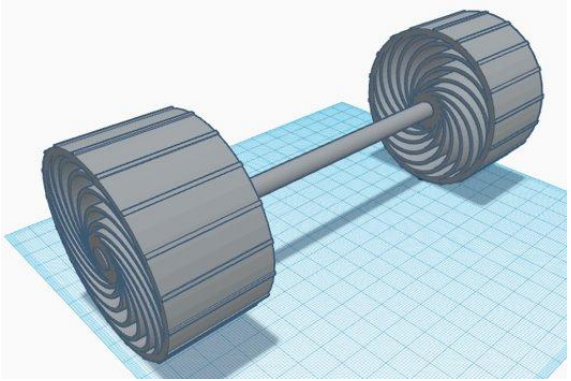

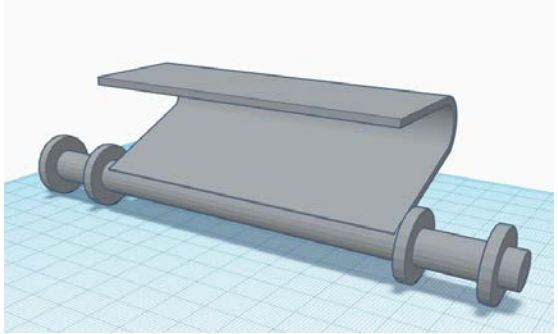

Suspension:
The suspension is a piece of sheet metal that is in a circle that allows it to be squished down a little. On the bottom of the metal is a rod with both wheels attached to it. This will help it go over rough surfaces while being used on the moon. The suspension doesn't hold the main part off the ground, so it is still usable.