Lunar Energy Bites Dispenser

Finalist List

for

NASA HUNCH

Design and Prototyping 2021

Congratulations for being chosen as a Finalist for NASA HUNCH Design and Prototype 2021. Your design was chosen as a Finalist because your team has fulfilled all or most of the requirements for your project along with quality in design and manufacturing the prototype. Your team demonstrated good testing of your prototype and knowledge of the problems and extensive understanding of the environment for your project. There was a lot of really amazing competition for these spots and all people from the semi-finalist

By being a Finalist means that you are a winner but this does not mean your idea will fly to space. This is real engineering. Although it is possible the reviewers could see one design that is exactly what they want, it is more likely NASA may choose one or a few ideas from each team to incorporate into a different design. It is also very possible that requirements or needs have changed since the beginning of the school year and they are not interested in the idea at this time. This is the nature of engineering but it does not diminish your accomplishments.

Design to Flight

The goal of HUNCH is to keep your names attached to these ideas and to have you assist with later developments of your projects when possible. Your projects and information will be provided to Mike Bennett who runs the HUNCH Design to Flight program that will coordinate the sending of your ideas to the engineers as they request it and working with your team to give engineers assistance whenever possible. This might include updating or making new CAD drawings, assembly of prototypes, choosing flight components and/or assisting with presentations. You will receive an email through your teachers in the coming days requesting specific information about your project.

Patents

In general, NASA does not seek patents on materials that are only related to space, however, if there are other potential uses for the device or ideas related to Earth bound applications, HUNCH will ask NASA Tech Transfer to assist in working through patent process. It is our goal that students and schools are included in any patents with as much credit as possible. We do not anticipate this as an income generator but more as value to your resumes.

Presentations:

General:

- Practice your presentation.
- Look sharp and professional.
- Everyone from the team should talk.

- Briefly introduce yourselves including your name and grade and school and state.
- Reviewers will already be aware of the problem and the constraints– I'll take care of that.
- Start with a demonstration of your prototype and briefly describe the testing that has been done.
- Point out details that make your design innovative, more robust, cleanable, repairable or desirable.
- Mention one or two things that didn't work initially but you were able to make changes and move forward.
- Briefly talk about how your prototype is different from the final product would be and include the materials you think will be used on the design that would fly to space.
- Answer questions quickly and concisely but completely so you can answer more questions and receive more comments. If you don't know something, say that you will have to check on it and plan to get back with them with an answer by email.
- Relax. These people are interested in what you have to say and know what its like to be on the spot.

Specific to Food Bite Dispenser

- Show simplicity, functionality, cleanability. The astronauts will want this if it is easy to use and does not get in their way while they are working.
- Show how it can be tailored to the individual.
- You will be giving your talk with the other Finalists on **April 28—2:30 to 4:00 CT**
  I will be sending out invites for a Microsoft Teams meeting in the next couple of days to the teams.

Glenelg High School
Glenelg, Maryland
Teacher: Raymond Gerstner

DEBX

Distributer of Energy Bites for eXploration

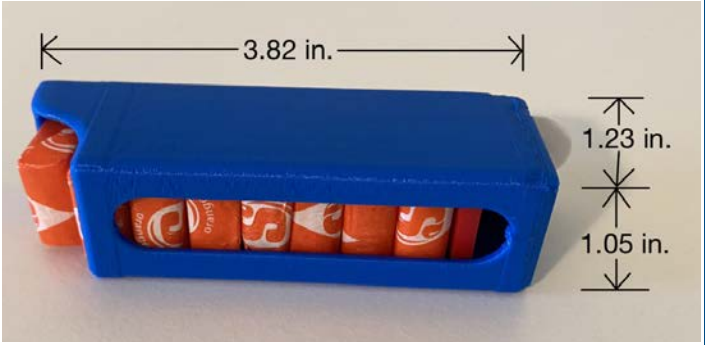

Kristine S. Connor I. Ajitesh K.

Contact Us
glenelgfoodbites@gmail.com

Main Components

- Body with mount
- Follower
- Variable force spring

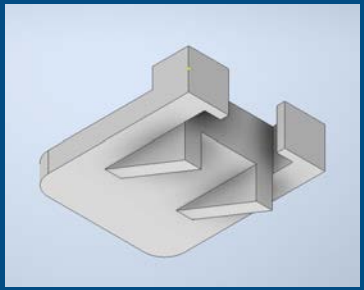

Scan or click QR code for more

Key Design Features

- Holds 8 energy bites
- Rectangular energy bites (0.78" X 0.8" X 0.4")
- Clip mount
- Largely 3D printable
- 31 grams per unit

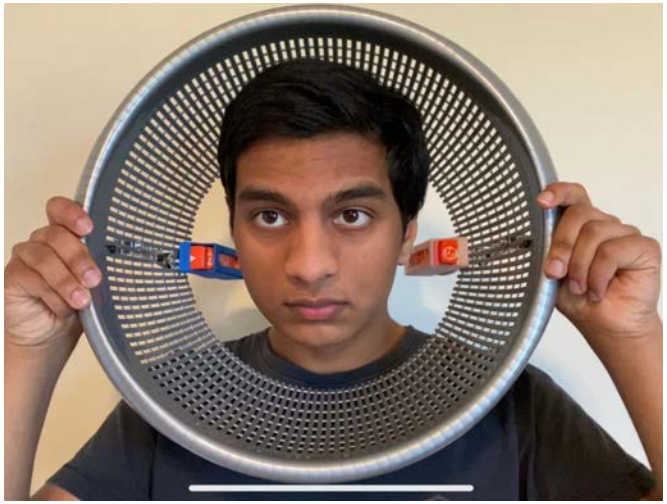

Can fit 2 dispensers in helmet

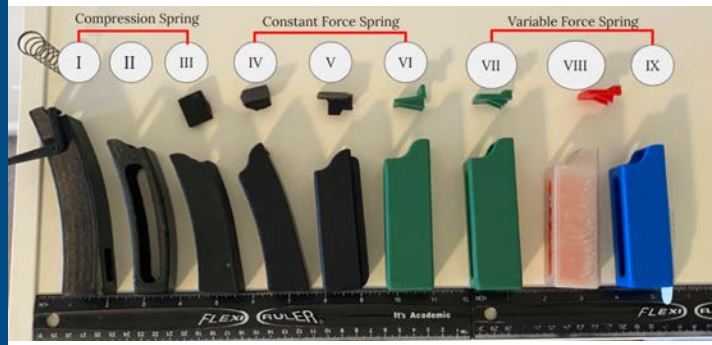

Progressively smaller design

HUNGRY HELMETS ENGINEERING

Hands Free Food Dispenser

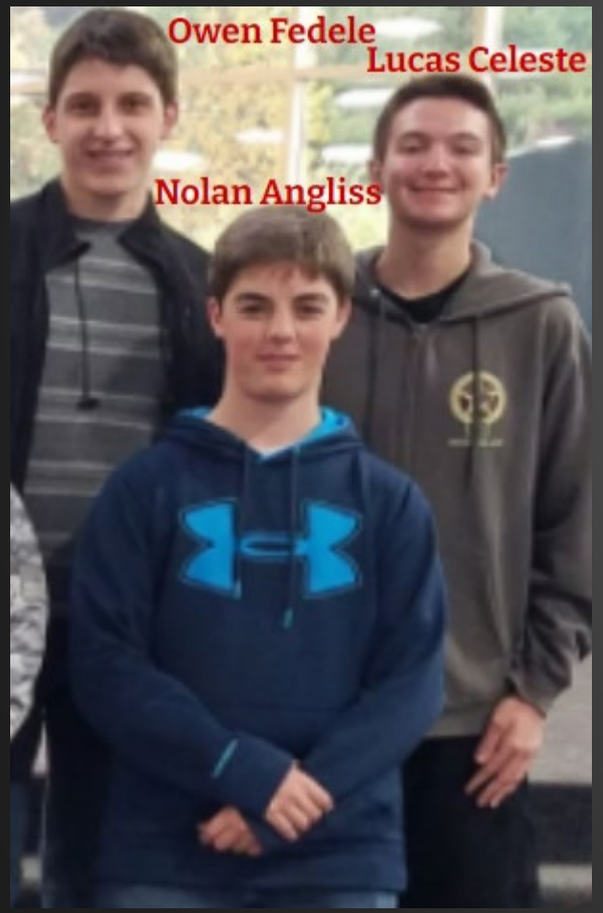

Our spring-loaded food dispenser allows astronauts to eat a variety of foods during spacewalks without using their hands. The dispenser connects to a flexible rod with a ball and socket joint that allows the user to position the dispenser however they like.

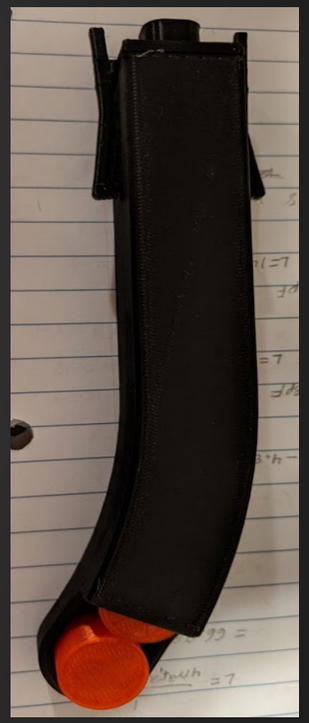

Features

- Customizable mounting orientation
- Spring loaded, automatically pushes food to front
- Easy to print with FDM printer
- Removable back cover allows for easy cleaning
- Cylindrical food bites are easy to grab with teeth

In action

This is the flexible ball and socket mount that our prototype connects to.

Materials

Feeder Body:
- **Ultem (**Polyetherimide**)** Rigid, strong, flame retardant, UV resistant

Removable Bottom Cover
- **Ultem (**Polyetherimide**)**

Food Pellet:
- **Food :)**

Food Dispenser Drawing

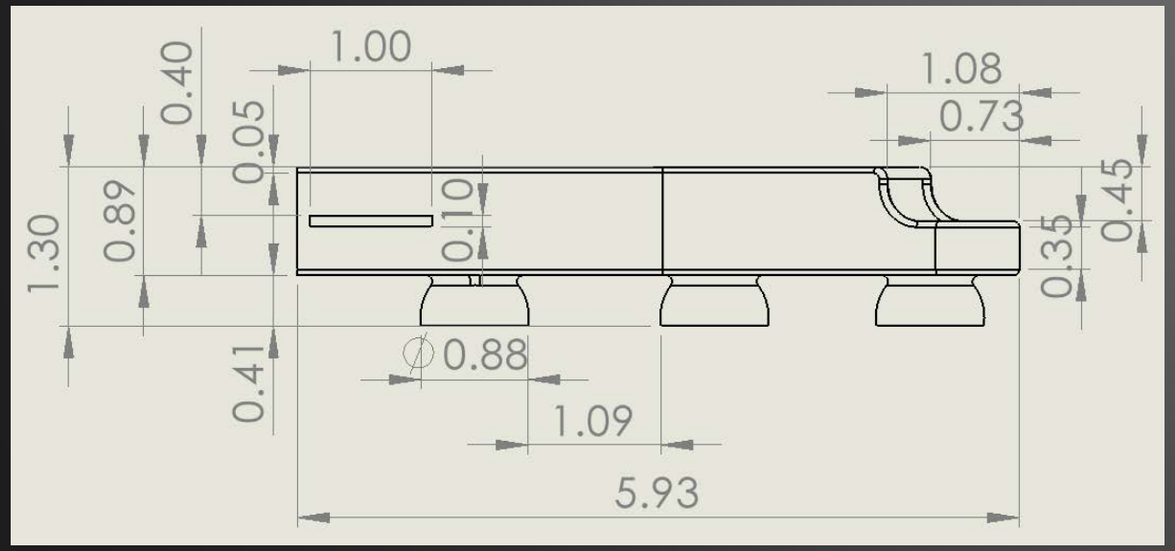

Food Bite Dimensions

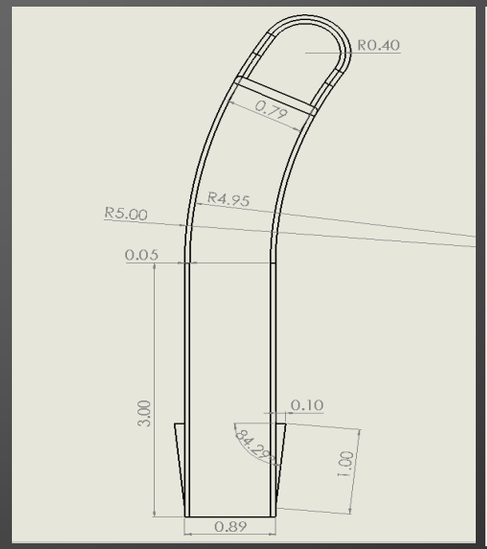

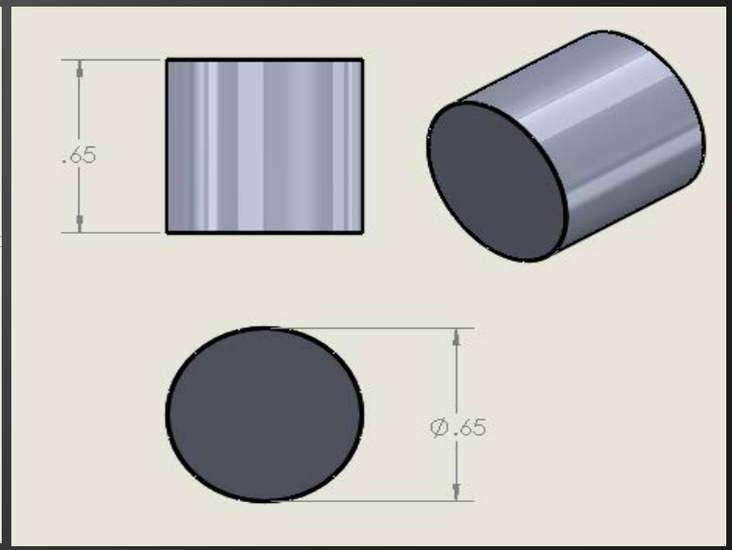

Major Revisions

- Dispensed gumballs
- Used ~~Bacon-Flavored~~ Spherical food pellet
- Compression spring
- Mouth-activated lever
- Sometimes didn't adequately push bottom food pellets to the top
- Lever was finicky and hard to use

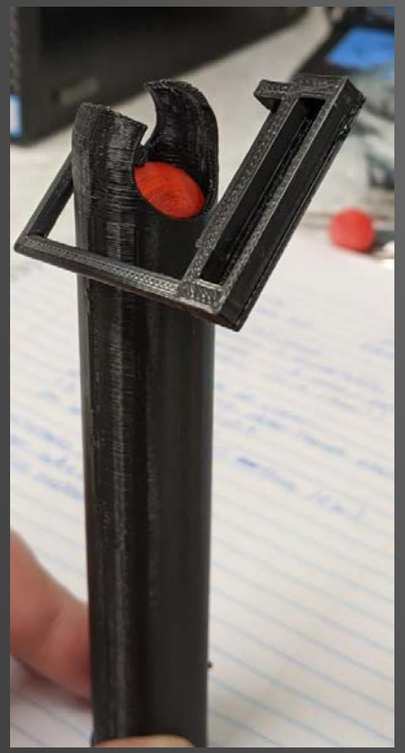

- Replaced compression spring with exterior tension springs to allow bottom food pellets to actually be pulled up.
- New lever that is easier to use
- The new tension springs worked too well and crushed the gumballs

- Used cylindrical pellets for compression strength
- Removed lever and redesigned for no-lever operation
- Designed neckband
- Added sockets on bottom of feeder to connect to neckband via flexible rod

VISUALS

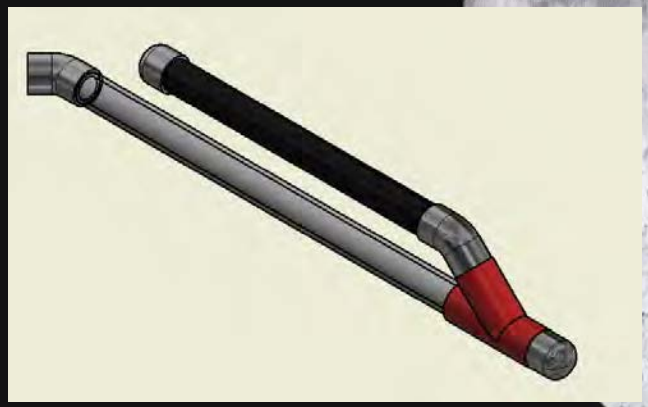

The M.M.C Food Bite dispenser

Contact US!

Bridgeland High school

10707 Mason Rd, Cypress, TX 77433

NAMES

MATTHEW CRUNK,MARK ORTIZ,COLE MEIER

BUILDING PROCESS

We started with a simple pvc pipe with a holw in the bottom and some whoppers. The whoppers didn't work so we had special size balls 3d printed and they worked beautifly. From there we added the extra pipe for the food then we ran into a problem. The balls from the tube were holding down the balls in the main chamber. So we filed down the inside of the y bracket to keep the balls in the food tube level with the one in the chamber. Once we did that the only thing left was finalizing and submitting our project.

BRAINSTORMING

Originally we were going to go with some sort of mechanical lever arm then we realized that would be impossible since the astronaut can't move things in his helmet with his hands. We didn't want something that would block their vision so we thought to go down the length of the body. We were thinking about pvc pipe from the beginning but not sure how. We thought what could use only a mouth to move them. That's when we thought of having airflow moving them up through the tube

NASA HUNCH

DESCRIPTION

Its 2 pvc pipes connected through a Y piece with a cap at the button of the Y piece that has a hole in it to allow air in and stop the balls falling out. One pipe, for the food, is connected to the Y with 45 degrees bend to make it straight. On the other end is another cap to keep food in if the astronaut falls or is in zero gravity. The other pipe is so the food can get to the astronaut. It's connected to the Y piece and has another 45 degrees bend to serve as a mouthpiece so the astronaut can get the food.

TEAM PHOTO

School: Bridgeland High School
Teacher: Mr. Laughlin
Students: Alexandra Hayden and Nala Solomon
Description: Our food bites dispenser is the best possible choice in making sure the astronaut has food during a space walk. We found a spring that regulates pellet flow through the part that holds the food using a spring loaded mechanism. When our button is pushed the bottom arm moves the desired distance, pauses to allow the astronaut to gather the pellet, and then returns to its original position where it reloads and awaits the next button push.

F.E.E.D. M.E.

(Food Bites Dispenser)

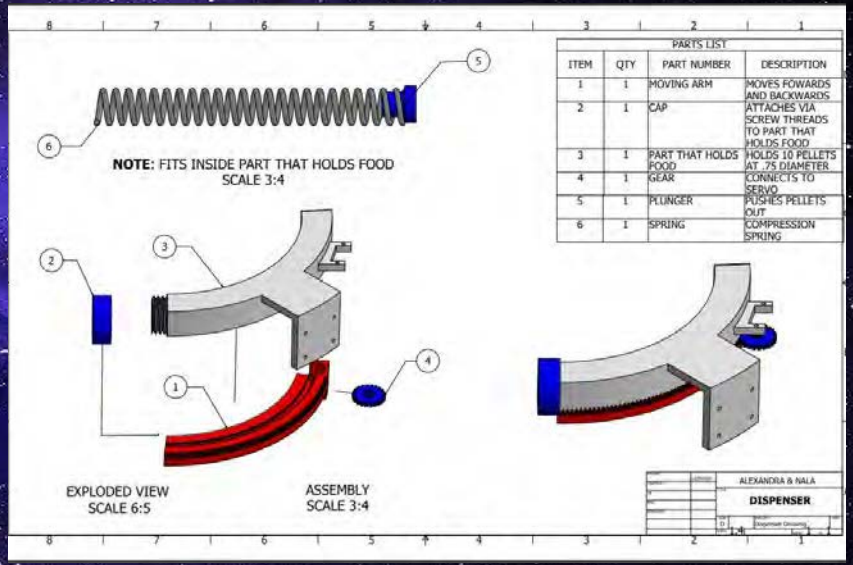

Inventor Assembly Drawing

Team picture

All Components

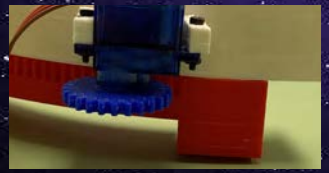

Gear & Servo View

Top Arm View

Food Bite Dispenser

Meridian Technology Center
Mrs. Short
Carolyn Elkin, Faeron Dewart-Cordray, Reagan Todd

Our design consists of a 4”x1.5”x1.4” box that uses a spring to push up the platform that holds the pieces. For refilling, the front panel slides off. Two hooks are also on the front panel to hold the bites in place before being pulled out. The screw and cap on the back hold a ball joint on a gooseneck tube to allow for adjustability, and the short tube is mounted to the helmet using a secure suction cup.

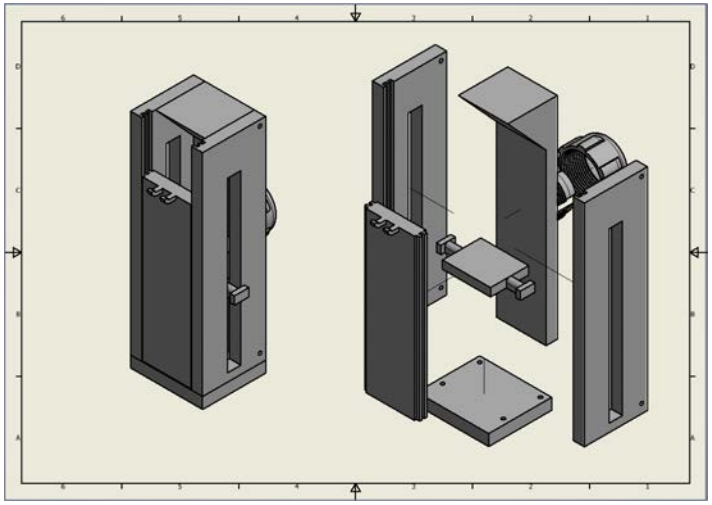

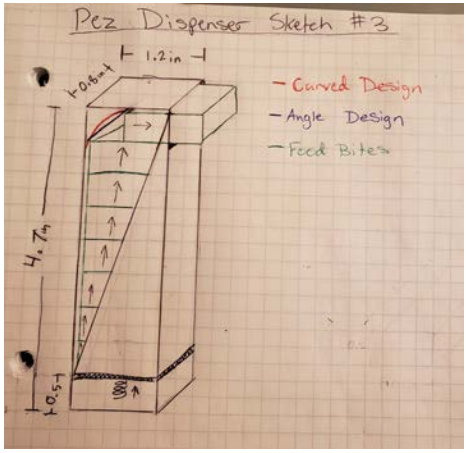

General Overview

Our design for the food bite dispenser focuses on the simplicity of the product and convenience for the user of the dispenser. The shape of the dispenser allows for large, substantial bites for an 8-hour trip. We also designed a rail system to allow for the row of dispensers to be moved in front of the mouth, or behind the head and out of sight.

Our Team:

[pictured left to right]

Josiah Richards: Food Bite Lead Designer

Christian Taniyama-Mento: Rail System Lead Designer

Makayla Abril Butters: Space Helmet Design & Construction

Mikella Chang: Overall Design Critic

Frederick Herrmann [not pictured]: Supervisor

The Food Bite Dispenser

MAKUA LANI CHRISTIAN ACADEMY
KONA, HAWAII

The Food Bite:

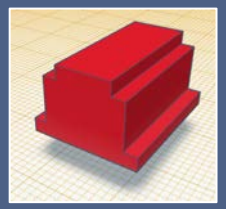

Bite 3D Model

Dispenser

The food bite and the food bite dispenser are as lightweight as they are simple. The silicone design of the dispenser places a strong grip on the food bite, allowing it to be violently jostled without the food bite dislodging. Yet biting the food bite will still easily remove the bite from the dispenser.

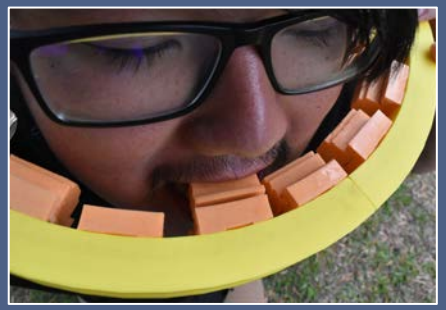

Firm grip & easy removal!

Compact design

The Prototype:

How it works: The food rail is attached to the inside of the helmet. The astronaut bites the tab and shifts the food bites to the front of the helmet with a turn of his head. The astronaut can eat the food and move the rail back into its original position, conveniently out of the way.

The Food Rail:

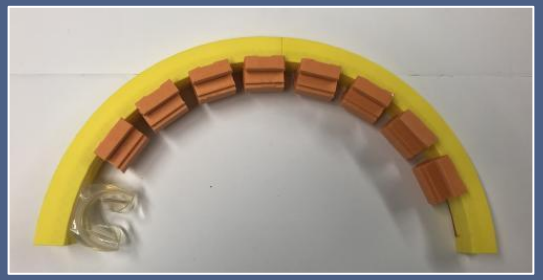

The food rail is composed of an inner rail and an outer rail; the inner is stationary and the outer slides. The grip tab and food bites are attached to the outer rail at even intervals. The food rail can hold up to 8 hours of sustenance.

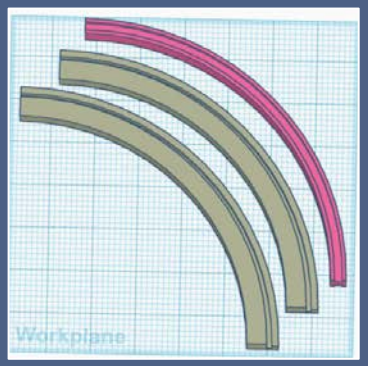

Rail 3D Model