Solar Powered Brick Making Lunar Rover

Pipe, Auger and Extruder

(using recycled plastic trash)

Glenn Johnson

4 separate projects

Software and mechanisms for tracking the sun for the moving rover

Method for cleaning lunar dust off mirrors and solar panels

Collapsible parabolic mirror for melting plastic and heating lunar soil

Pipe and auger for mixing and extruding lunar soil and plastic trash bricks

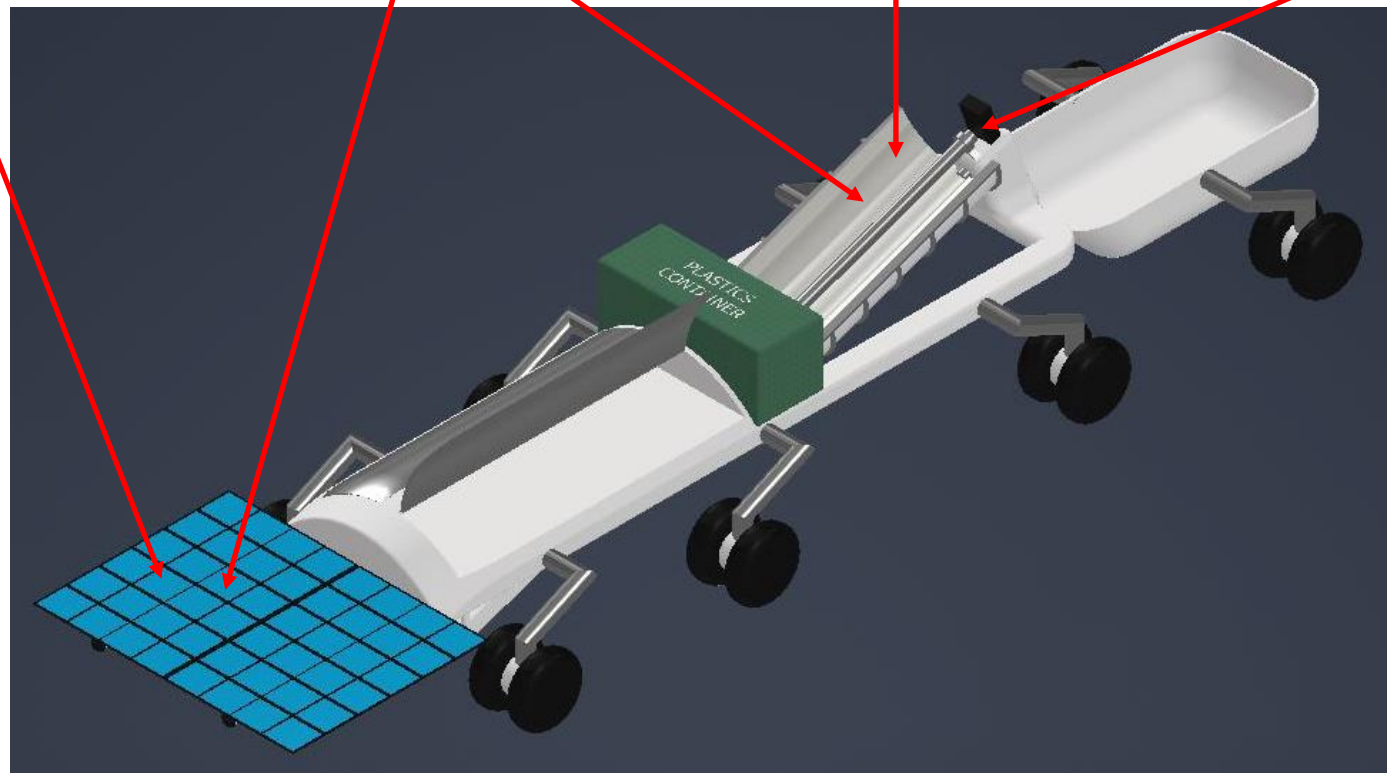

The Big Picture—Lunar soil

Mechanical properties

- Lunar Regolith is the powdery soil like material on the moon that is the result of rocks being broken apart by impact from meteors striking the moon. It is very jagged and abrasive to the touch since there isn't any flowing air or water to tumble the particles and round them off. There isn't any organic material or microbial life like the soil found on Earth nor has it gone through chemical weathering—it is mostly broken rocks and minerals. Because the regolith is more jagged, the particles can bind together and prevent some motion. When hammering poles or spikes into the ground, the spike required a lot more force than when hammering into Earth sand. It was much easier if using a rotary motion like a drill. All of this can make it a good material for making bricks since the jagged pieces will aid in holding the bricks together but it can also make it very abrasive to the equipment and make the materials wear down quicker. Dust can be a very significant problem on the moon. Even though there isn't wind to blow the dust into a storm, the moon is only 1/6th the gravity of Earth so if the dust is kicked up off the ground, it goes higher and it takes 6 times as long before it settles to the ground.

Static electricity

- When the sun hits the regolith, some of the electrons are pushed off the dust particles giving some of them a static electric charge. On the terminator line (the line between the dark and light side of the moon) the Apollo astronauts reported seeing a curtain of dust particles rising up off the ground as they flew over. This is where the positively charged dust (dark side) was mixing with the electrons (from the light side). This doesn't sound like a lot of mass moving but the dust can get into very small areas and damage equipment, not to mention the static electricity that might damage the electronics.
- https://lasp.colorado.edu/home/2020/09/02/lasp-researchers-develop-method-to-clean-lunar-dust-from-surface/

Construction material

- NASA is interested in using lunar regolith as a building material for structures on the moon. These structures will be for protecting the astronauts from radiation, micrometeorites, to make roads, provide good landing surfaces and many other applications. Because of the variety of uses there will probably be a need to have multiple shapes and types of construction materials and methods of manufacturing the building materials. These will also use a variety of different robotic rovers and robotics to accomplish the many needs.

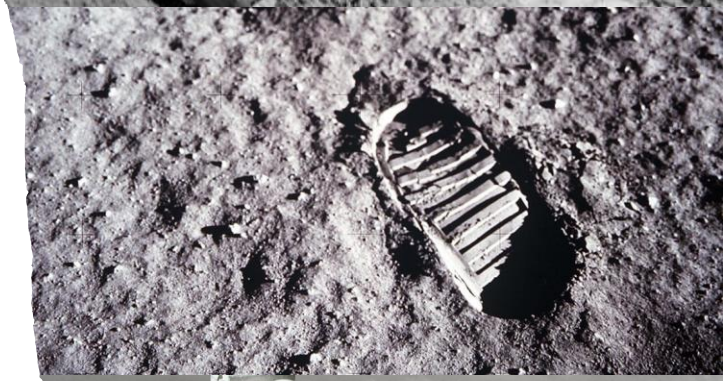

https://www.usatoday.com/story/tech/2014/01/05/nasa-brings-moon-indoors-to-kennedy-space-center/4329773/

Even though this is loose dirt, notice what it is like when he is raking the lunar regolith simulant.

Recycling plastic packaging into bricks

- One of the many difficulties of a lunar base with people is the amount of trash that will be generated. Although the astronauts will be eating most or all of the food that is sent, there will be a significant amount of plastic food packaging sent to the moon. This packaging will be similar to clear plastic wrappers used on Earth and melts around 125 to 132 C.
- **Our goal is to make bricks out of the lunar soil using the plastic trash that is sent to the moon as packaging.**
- Although it is easy to use electricity to make heat, it is also very power hungry. Solar panels are only able to convert around 20% of the light that hits them into electricity. Then the electricity has to be converted into heat—also not very efficient. It would be much easier and more efficient to concentrate the solar energy using mirrors to heat the lunar regolith and plastic– around 80 to 90% efficient.
- The plastic and lunar regolith need to be heated to the same temperature so they will mix evenly.
- One option is to have a rover that scoops up regolith and brings it back to one location where it is mixed, heated and extruded. The other option is to scoop up the regolith and mix, heat and extrude as the rover goes. This makes for a bigger rover but hopefully keeps the dust down near the habitats and other equipment and maybe less dust on the mirrors and solar panels. Its also more fun to build a rover than a stationary brick maker.
- The higher the percentage of sand in the brick, the more bricks we can make with the amount of plastic available but the more compression needed to press the material together when manufacturing the brick. The more plastic in the brick, the less compression needed for making the brick.
- https://www.youtube.com/watch?v=iFcPqXxAUWM

Rover Concept and components

This is a concept of how a brick making rover might look but the details each HUNCH team makes will influence the final design. The purpose of this model is only to give a visual idea of the main components. It should be expected that the solar panels and mirrors will need to be much larger to gather enough power and heat for the job.

Parabolic trough for heating plastic and regolith

Pipe and auger for mixing, heating and extruding regolith and plastic into bricks

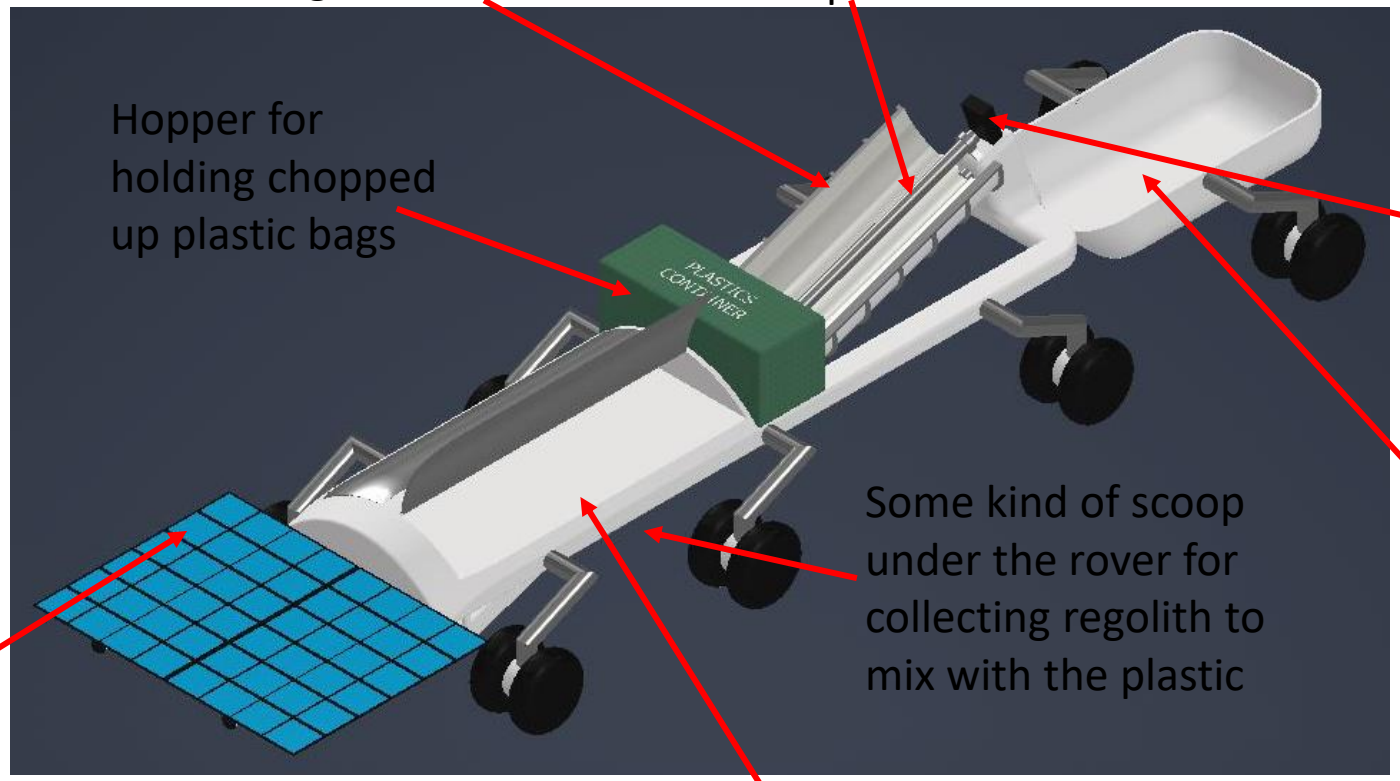

Hopper for holding chopped up plastic bags

Extrusion nozzle for shaping and cutting off each brick

Some kind of scoop under the rover for collecting regolith to mix with the plastic

Photoelectric panels to generate power for electronics, motor for auger, motors for driving, batteries and heaters for batteries.

Wagon for collecting bricks after being extruded

Location for batteries and control electronics

Pipe, Auger and Extruder

Problem:

Heating, mixing and extruding lunar regolith and plastic can be a complicated process when trying to have a consistent brick when the materials may be entering the stream at different temperatures and different particle sizes. Mixing a powdery material with a viscus plastic can be difficult with clumping and clogging. Lunar regolith is a hard, abrasive powder similar but not as rounded as sand that will abrade and wear down moving parts. Consistent, even heating of the pipe and auger will be important as the rover drives along picking up regolith and the sun changes position. Absorbing as much heat from the solar reflector will be a major factor in how fast bricks can be made and the size of the reflector required—the less heat absorbed by the pipe, the larger the mirror has to be or the slower the rover goes.

Objective:

Design, build and test a pipe, auger and extruder system that can be heated to 200 C that will mix sand and shredded plastic to a consistent slurry and extrude out into a 1” x 1” x 5” brick.

- The goal is to make 100 bricks per 24 hours. Since a lunar day is about 14 days, we would like to make around 1400 bricks per lunar day.
- The top few inches of lunar soil should already be around 250 degrees F if it has been sitting in the sun for long.
- Do no try to heat up PVC plastic as it can off gas poisonous gasses that can kill you.
- Your best option is to use grocery plastic bags which are made of polyethylene.

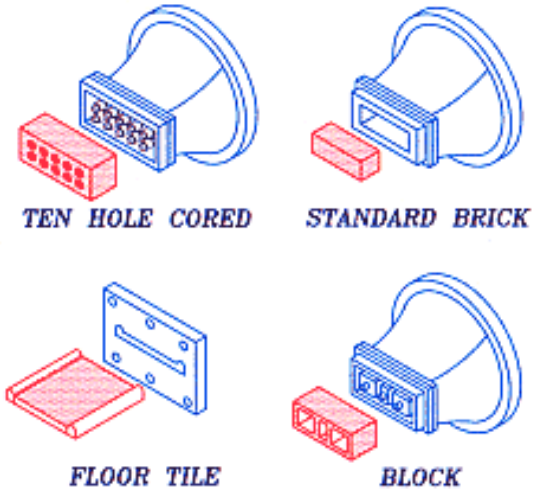

What color gets hottest?

- The auger pipe needs to absorb as much of the solar heat as possible. Any light that hits the pipe but isn't absorbed as heat is lost energy. Choosing the right coating for the pipe is an important choice for getting the highest efficiency of energy used. Most people will say that black absorbs the heat best and that is normally true but which paint or surface treatment will absorb the most. It will also be important that the paint or treatment won't flake off over time as it goes through many heat cycles from hot to cold and back. Are there any components that would be better if they absorbed less heat? What paint or surface treatment would be best for them? Here are a couple of ideas to look at:
- https://www.youtube.com/watch?v=i_8cynWnAw8
- Vantablack
- https://www.youtube.com/watch?v=fg2x0L4YAuU
- Car paint
- https://www.youtube.com/watch?v=lcaiwad2M-U

Batch process or continuous feed process?

If there are other teams at your school working the rover project, it will be important to coordinate the mirror style and the auger style to determine whether you are doing a batch process or a continuous feed process. Both have advantages and disadvantages.

There are two basic ways to make these bricks. One is the batch process where a specific amount of sand is mixed with a specific amount of plastic. It is all heated and mixed and then all of it is squeezed out into bricks. After one batch is finished another batch is made the same way. Kind of like how most people make cookies.

Another way to do it is with a continuous feed. Sand and plastic would be continuously mixed together at a specific rate in some kind of hopper. The hopper feeds into a tube that heats the mixture and continues to stir and ensures a smooth consistency. The heated mixture is extruded from the other side of the tube and cools as the next brick is made. This extrusion of bricks happens at a regular rate for as long as there is sun for heating the sand and plastic as well as solar electricity for

Continuously feeding sand and plastic into the hopper with the correct ratio for the brick hardness

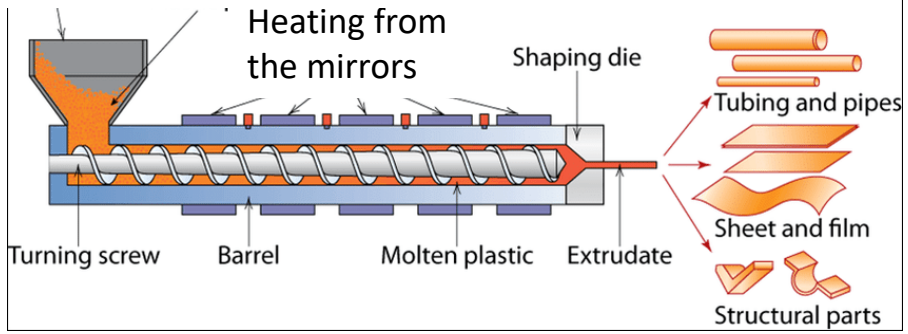

Things to consider

Is it better to do a batch process or a continuous feed
What kind of pipe do you need?
What is an appropriate diameter for the pipe
What kind of paint or coating could be on the pipe to make it absorb the most heat?

Just because paint is black doesn't mean it is absorbing all colors of light and gets hot. It is possible for Paint to be black and reflect infrared and not get very hot at all.

How long does the pipe need to be to get the required heat and mix the plastic and sand effectively?
What kind of auger will mix as it pushes the soil and plastic
What kind of mixture of ratio of plastic to sand is needed?
How much space should there be between the pipe and the auger?
Estimate how long the pipe and auger will last because of abrasion from the soil.
How will the brick be cut off from the extruder?

tips

- Edges should be rounded (not sharp corners) to make it come out of the die easier
- It may be valuable for the brick to exit the extruder into a channel that allows it to cool in the correct shape to keep the form.
- The more compression on the brick during the cooling process, the less plastic will be needed to bind the sand together.
- Because the brick is cooling in the vacuum of the moon, there isn't any convection of air to help cool the brick only its contact with the channel or holding bin and its radiating into space. It may be helpful for the channel to have cooling fins on the back side to increase the cooling rate. These fins will be increasing the cooling by radiation.

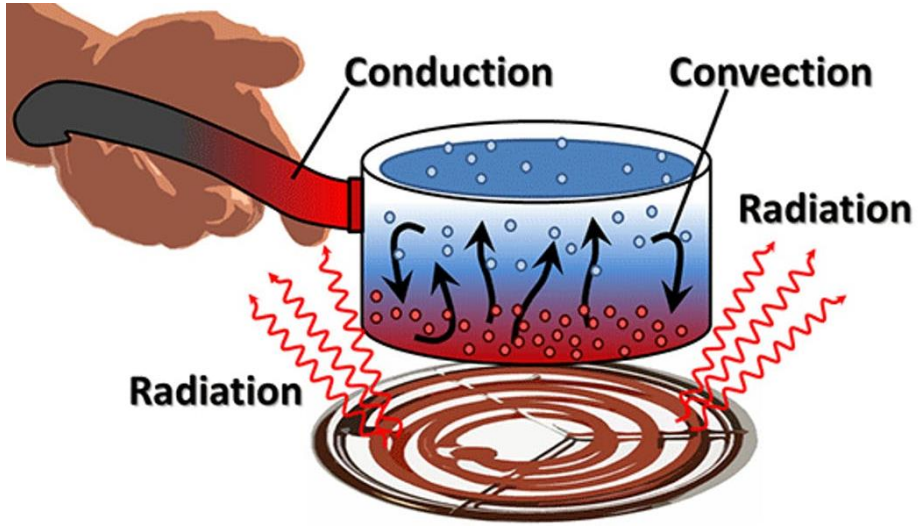

- Conduction is the transfer of heat by <u>contact</u> with the hotter object and transfers heat from one solid or liquid material to the other
- Convection is the transfer of heat by <u>motion of the liquid or gas</u> particles from the high temperature area to a lower temperature area
- Radiation is the transfer of heat by way of infrared <u>radiation</u> that escapes into the vacuum

Video training

Because we are mixing plastic and sand, these videos are different from what we are doing but they should give you a better understanding of the process.

Injection molding—check out this video to get some good background on injection molding.

https://en.wikipedia.org/wiki/Plastic_extrusion#:~:text=Plastics%20extrusion%20is%20a%20high,thermoplastic%20coatings%2C%20and%20wire%20insulation.

Extruding recycled plastic beams

https://www.youtube.com/watch?v=zNGuuSKE1pY

Pasta extruder

https://www.youtube.com/watch?v=21WJOtTDA3I

Cheap pasta extruder

https://www.youtube.com/watch?v=anyKWD6wH5I

Plastic extruder

https://www.youtube.com/watch?v=Tp2Rdx69SSo

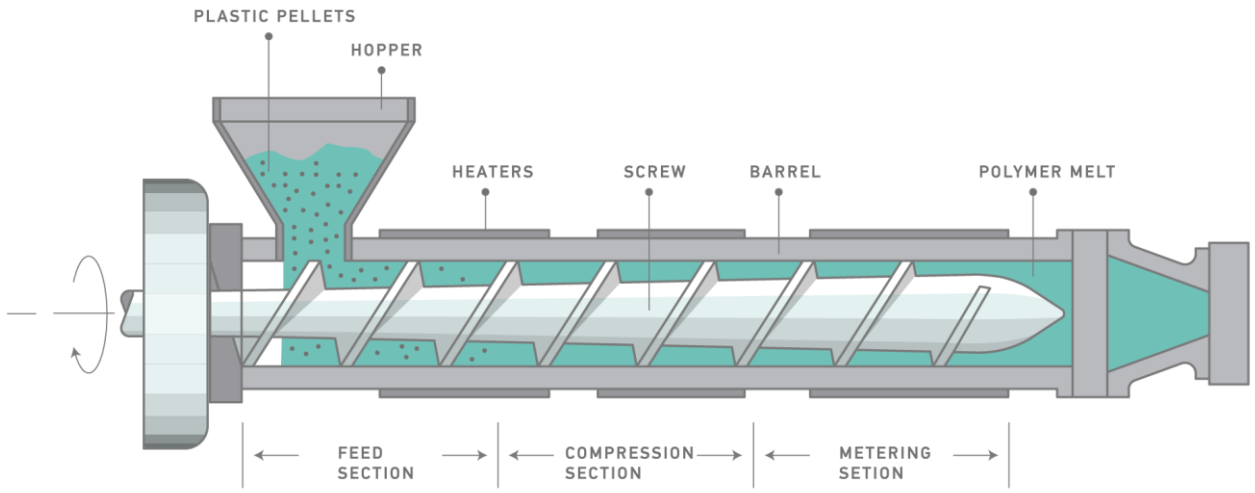

Instead of electric heaters, we are planning on the solar concentrators to provide the heat.

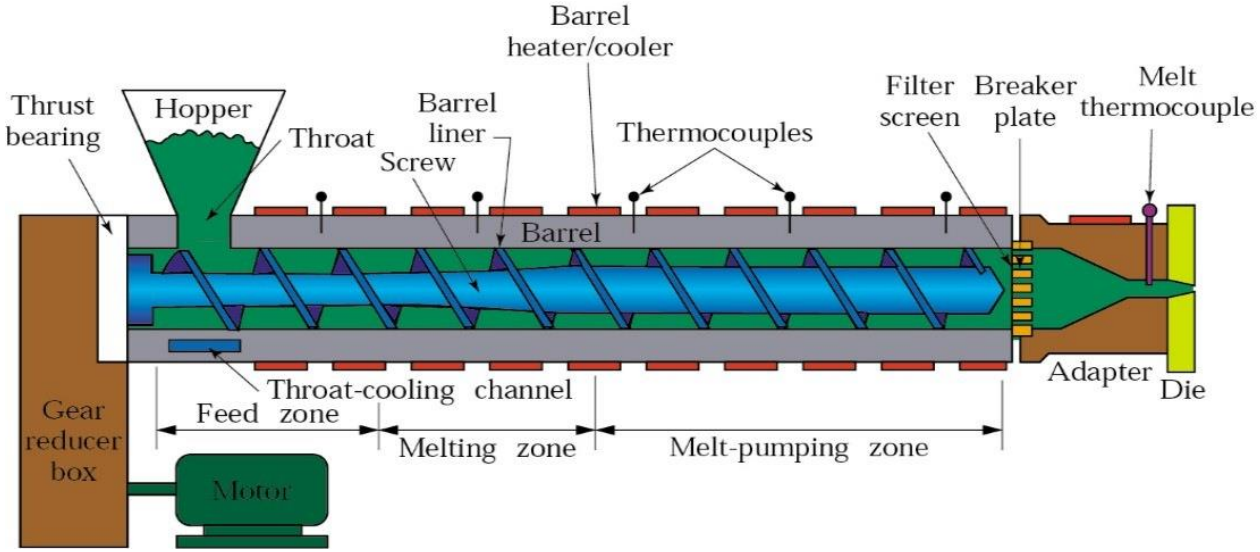

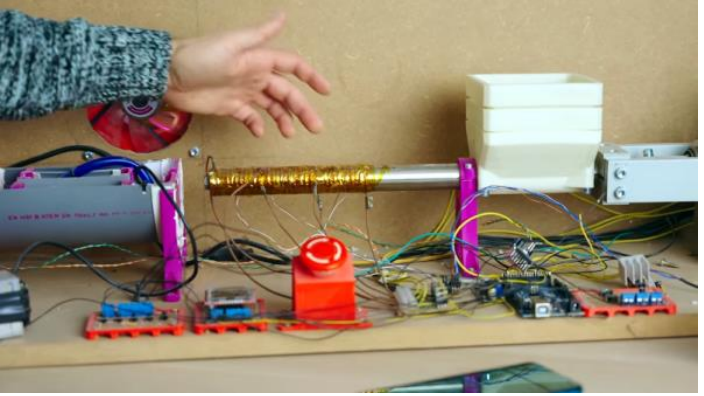

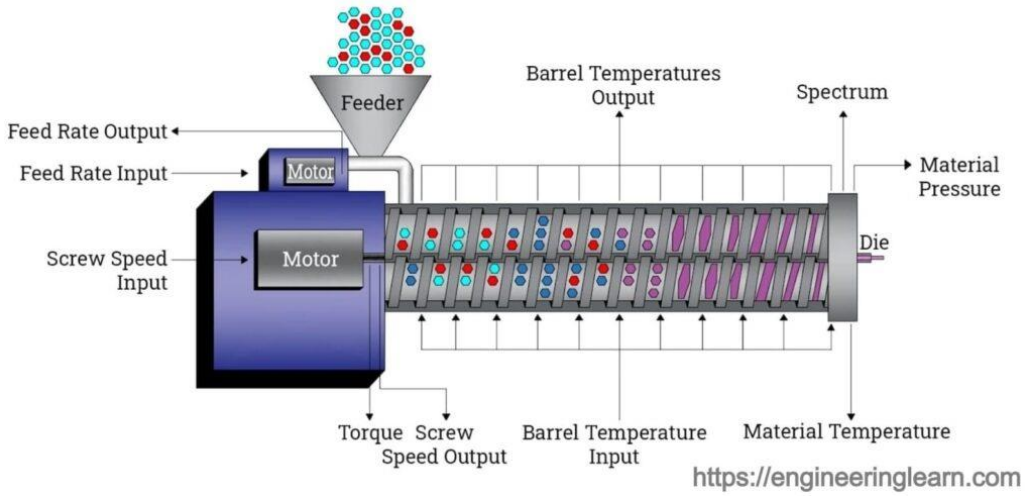

- https://www.youtube.com/watch?v=QbZKP4UAtL8
- The most important part of this is heating up the plastic and the sand. Both must be heated to the same temperature so they will combine effectively and evenly.
- The higher the percentage of sand, the more bricks can be made on the moon.
- Testing of bricks?
- Once cooled, How hot can they get before they start crumbling
- How cold can they get before they crumble?

- https://www.youtube.com/watch?v=5MxH1sfJLBQ