Solar Powered Brick Making Lunar Rover

(using recycled plastic trash)

Glenn Johnson

Sun Tracker

4 separate projects

Software and mechanisms for tracking the sun for the moving rover

Method for cleaning lunar dust off mirrors and solar panels

Collapsible parabolic mirror for melting plastic and heating lunar soil

Pipe and auger for mixing and extruding lunar soil and plastic trash bricks

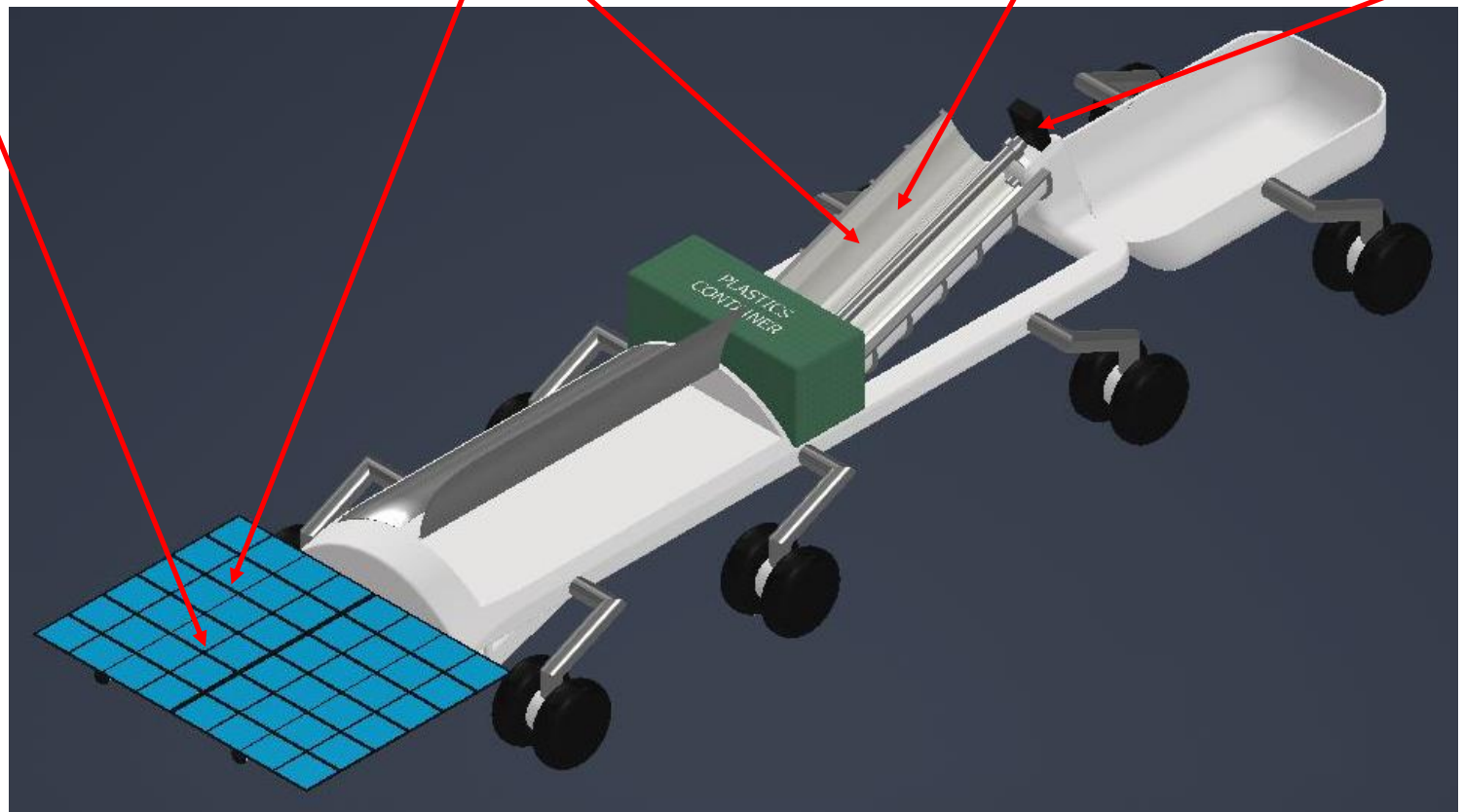

The Big Picture—Lunar soil

Mechanical properties

- Lunar Regolith is the powdery soil like material on the moon that is the result of rocks being broken apart by impact from meteors striking the moon. It is very jagged and abrasive to the touch since there isn't any flowing air or water to tumble the particles and round them off. There isn't any organic material or microbial life like the soil found on Earth nor has it gone through chemical weathering—it is mostly broken rocks and minerals. Because the regolith is more jagged, the particles can bind together and prevent some motion. When hammering poles or spikes into the ground, the spike required a lot more force than when hammering into Earth sand. It was much easier if using a rotary motion like a drill. All of this can make it a good material for making bricks since the jagged pieces will aid in holding the bricks together but it can also make it very abrasive to the equipment and make the materials wear down quicker. Dust can be a very significant problem on the moon. Even though there isn't wind to blow the dust into a storm, the moon is only 1/6th the gravity of Earth so if the dust is kicked up off the ground, it goes higher and it takes 6 times as long before it settles to the ground.

Static electricity

- When the sun hits the regolith, some of the electrons are pushed off the dust particles giving some of them a static electric charge. On the terminator line (the line between the dark and light side of the moon) the Apollo astronauts reported seeing a curtain of dust particles rising up off the ground as they flew over. This is where the positively charged dust (dark side) was mixing with the electrons (from the light side). This doesn't sound like a lot of mass moving but the dust can get into very small areas and damage equipment, not to mention the static electricity that might damage the electronics.
- https://lasp.colorado.edu/home/2020/09/02/lasp-researchers-develop-method-to-clean-lunar-dust-from-surface/

Construction material

- NASA is interested in using lunar regolith as a building material for structures on the moon. These structures will be for protecting the astronauts from radiation, micrometeorites, to make roads, provide good landing surfaces and many other applications. Because of the variety of uses there will probably be a need to have multiple shapes and types of construction materials and methods of manufacturing the building materials. These will also use a variety of different robotic rovers and robotics to accomplish the many needs.

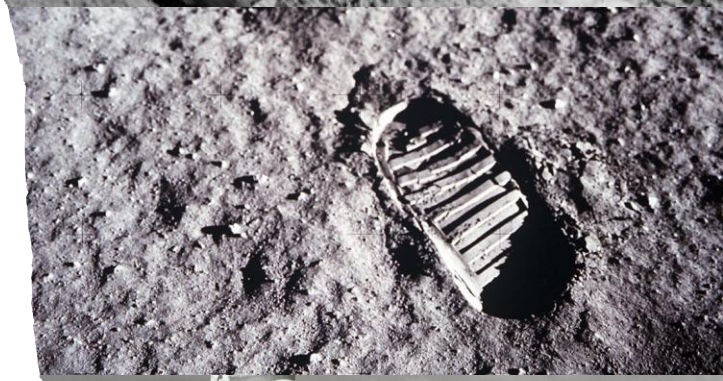

https://www.usatoday.com/story/tech/2014/01/05/nasa-brings-moon-indoors-to-kennedy-space-center/4329773/

Even though this is loose dirt, notice what it is like when he is raking the lunar regolith simulant.

Recycling plastic packaging into bricks

- One of the many difficulties of a lunar base with people is the amount of trash that will be generated. Although the astronauts will be eating most or all of the food that is sent, there will be a significant amount of plastic food packaging sent to the moon. This packaging will be similar to clear plastic wrappers used on Earth and melts around 125 to 132 C.
- **Our goal is to make bricks out of the lunar soil using the plastic trash that is sent to the moon as packaging.**
- Although it is easy to use electricity to make heat, it is also very power hungry. Solar panels are only able to convert around 20% of the light that hits them into electricity. Then the electricity has to be converted into heat—also not very efficient. It would be much easier and more efficient to concentrate the solar energy using mirrors to heat the lunar regolith and plastic– around 80 to 90% efficient.
- The plastic and lunar regolith need to be heated to the same temperature so they will mix evenly.
- One option is to have a rover that scoops up regolith and brings it back to one location where it is mixed, heated and extruded. The other option is to scoop up the regolith and mix, heat and extrude as the rover goes. This makes for a bigger rover but hopefully keeps the dust down near the habitats and other equipment and maybe less dust on the mirrors and solar panels. Its also more fun to build a rover than a stationary brick maker.
- The higher the percentage of sand in the brick, the more bricks we can make with the amount of plastic available but the more compression needed to press the material together when manufacturing the brick. The more plastic in the brick, the less compression needed for making the brick.
- https://www.youtube.com/watch?v=iFcPqXxAUWM

Rover Concept and components

This is a concept of how a brick making rover might look but the details each HUNCH team makes will influence the final design. The purpose of this model is only to give a visual idea of the main components. It should be expected that the solar panels and mirrors will need to be much larger to gather enough power and heat for the job.

Parabolic trough for heating plastic and regolith

Pipe and auger for mixing, heating and extruding regolith and plastic into bricks

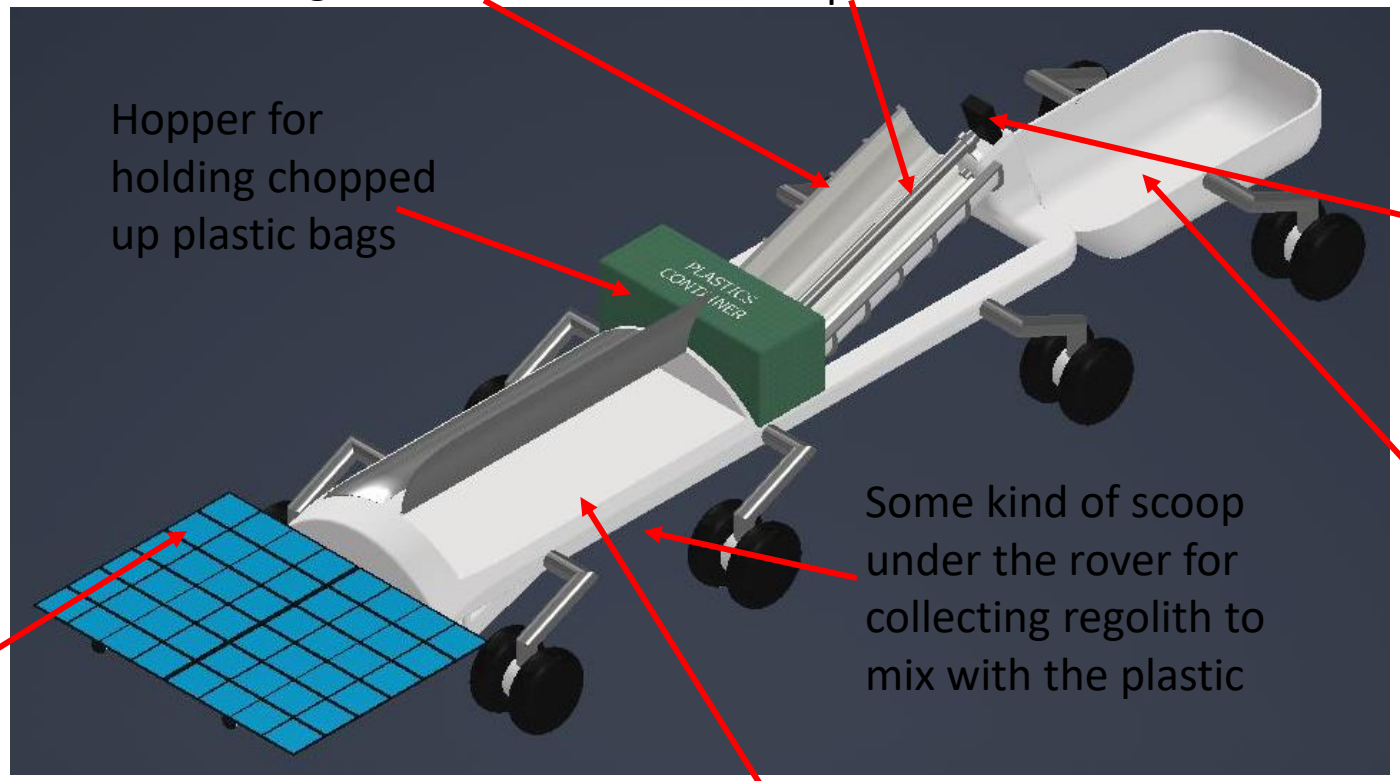

Hopper for holding chopped up plastic bags

Extrusion nozzle for shaping and cutting off each brick

Some kind of scoop under the rover for collecting regolith to mix with the plastic

Photoelectric panels to generate power for electronics, motor for auger, motors for driving, batteries and heaters for batteries.

Wagon for collecting bricks after being extruded

Location for batteries and control electronics

Sun tracking software and mechanisms for rover

Problem:

A lunar rover task is to scrape up lunar regolith, mix it with shredded, plastic trash, heat up the mixture to a high enough temperature for it to mix evenly and extrude bricks of the mixture that will be of good enough quality to be used as roadbed or stackable bricks for structures.

To simplify the sun tracking mechanisms, the rover will drive 1 km North/South lines to scoop up soil. This will look similar to mowing the lawn and may move slower. It will be important for the solar panels and the parabolic mirror to be pointing at the sun and not the Earth (the other bight thing in the sky). Every time the rover reaches the end of one track, it will turn around and drive a parallel line with it's last path and will need to reposition its mirror and solar panels. The mirror and solar panels will also be angled some to allow for dust to fall off. The rover won't be driving quickly but it will be churning up some dust since there is only 1/6th the gravity as on Earth.

There is a scoop, kind of like a dust pan, on the bottom of the rover that is taking the top inch or so of regolith that is feeding the regolith into the auger to mix with the plastic. This dust pan may need to be lifted and lowered to get more or less soil or to release a bigger rock that may clog the dust pan.

Objective:

- Develop software either on Arduino, Raspberry Pi, Mindstorms or VEX that can track the sun and position the parabolic mirrors and solar panels to obtain the most solar energy through a lunar day (about 28 Earth days—14 days of light and 14 days or dark) while the rover drives through lunar craters and over rough terrain. Some of this can be done electromechanically. There should also be room in the software for activating the dust removal system when some amount of dust degrades the collected solar energy is on the panels and/or mirrors.
- This software should also be able to regulate the speed of the motors that drive the wheels, the auger and when to initiate the dust removal system for the mirrors and solar panels.
- There will be several factors that determine how fast the rover can make bricks.
  - When the sun first comes up, the regolith will be colder and as the shadows get longer by the end of the lunar day, the regolith will be cooling off
  - If the regolith is colder, the rover will have to pick up dirt slower and the auger may have to turn slower
  - The regolith will be hottest in the middle of the lunar day when the sun is straight over head so the rover will be able to produce bricks faster.

Gearing and motor used in rotating a telescope

- This is a significantly easier job than the Opportunity and Spirit rovers that traveled around Mars for several years. There was always at least a 20 minute delay for signals sent to and from Mars. They had difficulties with getting stuck in loose sand, the threat of freezing their batteries and dust covering their solar panels. Check out the National Geographic movie “Expedition Mars—Spirit and Opportunity” and see some of the difficulties they had to work around.

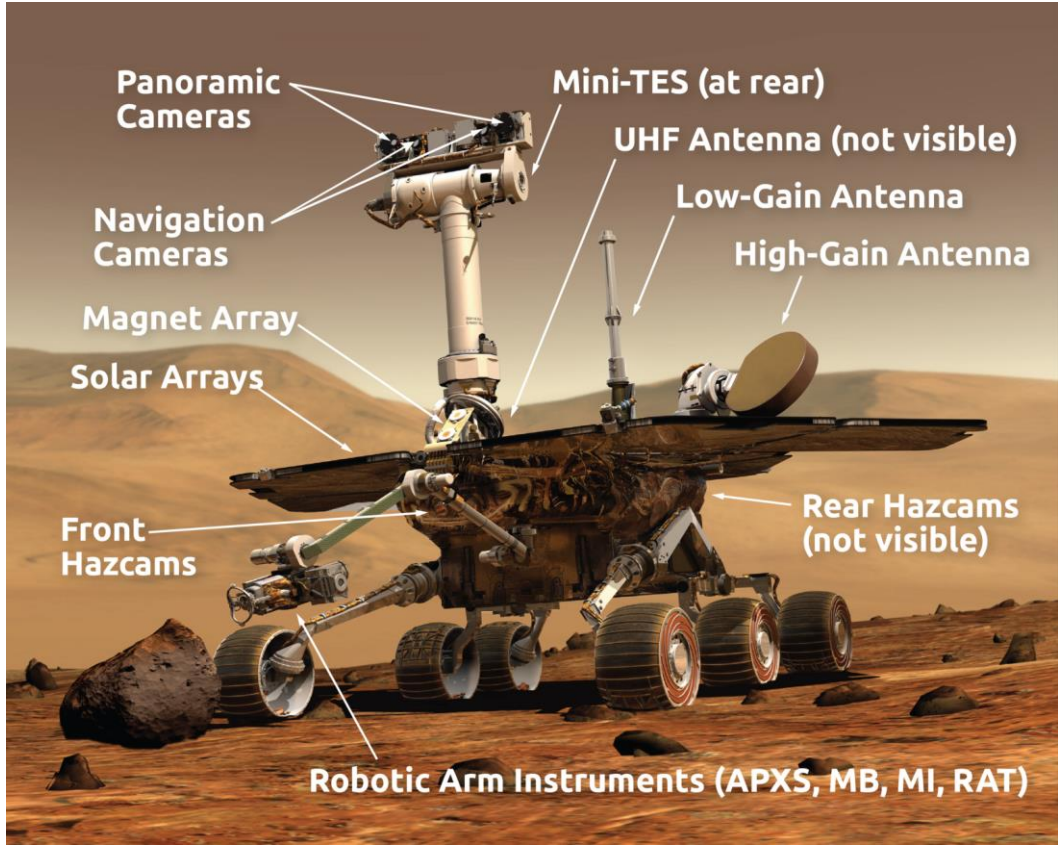

Solar tracker

Solar trackers can be done electromechanically or driven by software. Both are acceptable. The main purpose is to account for the sun's position as the rover drives north to south and south to north. There will also be some change of position as the rover bumps along down into some craters and back out. For the moment we will assume the rover will be in a fairly powdery area and won't go over any rocks bigger than a baseball and that the short time it will take to drive over them doesn't significantly interfere with the heating of the brick materials.

Solar trackers are a combination of gears, motors, electronics and even software that allows solar panels and mirrors to track the sun as it moves across the sky to optimize the amount of light they collect. Since the sun will move across the sky differently on the moon than it does here on Earth, the sun tracker for the rover will have some differences with those used locally—gears, motor speeds, worm gears.

The angle of the mirrors and solar panels will also be different depending on the location of the brick making site. If the rover is close to the Lunar Equator, the angle will be close to horizontal and the closer the site to the North or South Poles, the closer to vertical. The angle will also be affected by the need to minimize dust from collecting on the mirrors and panels.

From the surface of the moon, the light reflecting off the Earth could be bright enough to confuse some of the light sensors used on the rover.

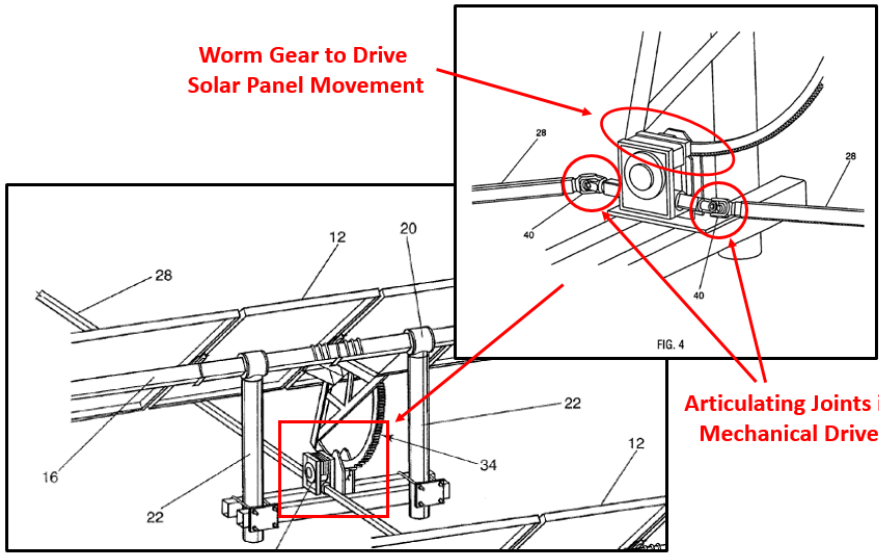

https://www.youtube.com/watch?v=T1L_EjuFav4
https://www.youtube.com/watch?v=_6QIutZfsFs
https://www.youtube.com/watch?v=wL9PcGu_xrA
https://www.youtube.com/watch?v=aQaCY7wlQEc
https://www.youtube.com/watch?v=Oj1E7o7J3qc

Developing your mechanism

- https://www.youtube.com/watch?v=hSmrecZDGxQ

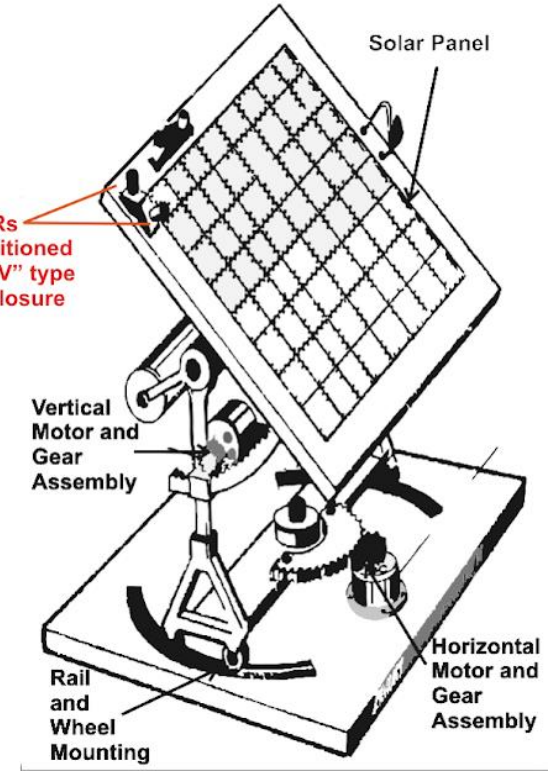

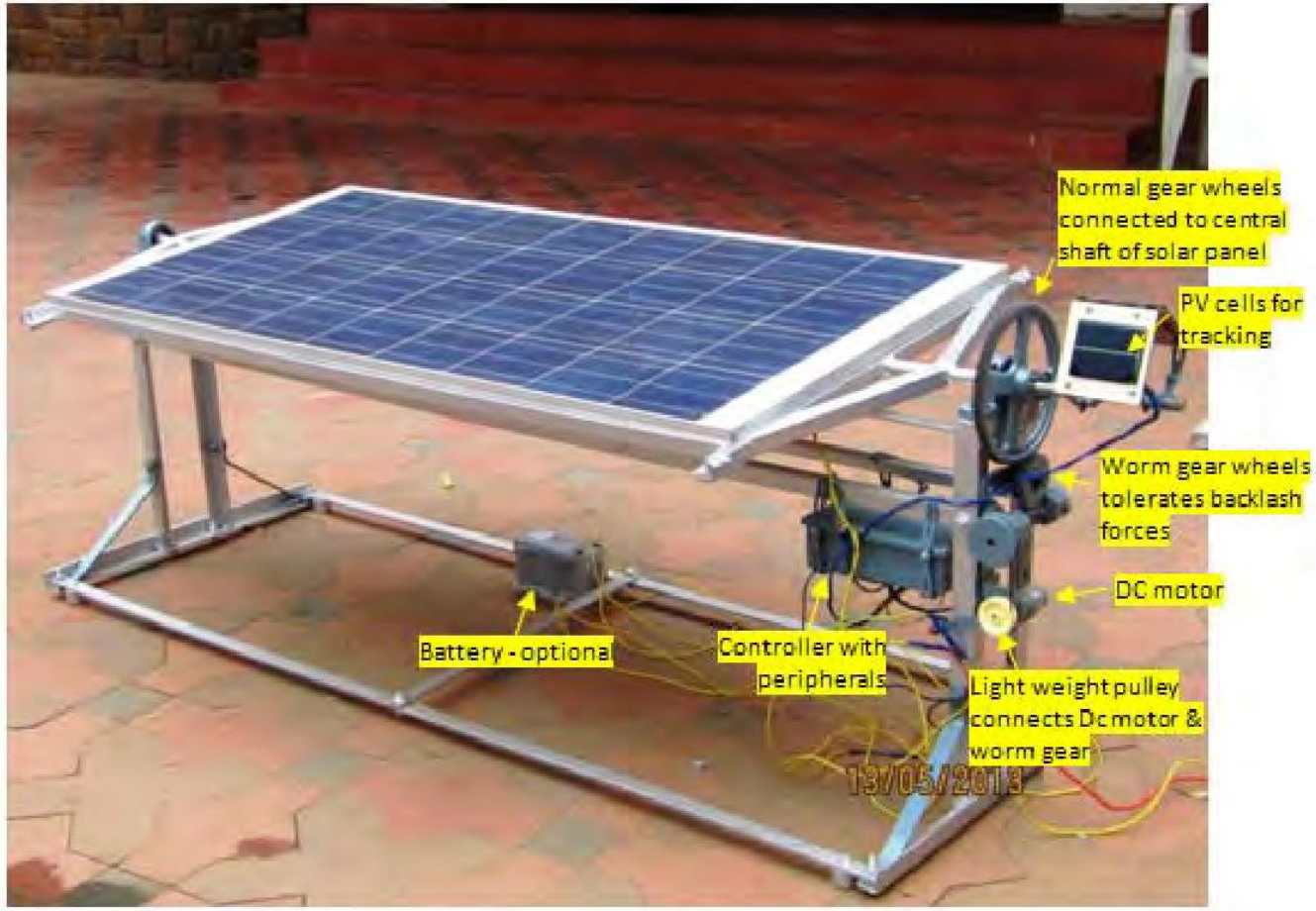

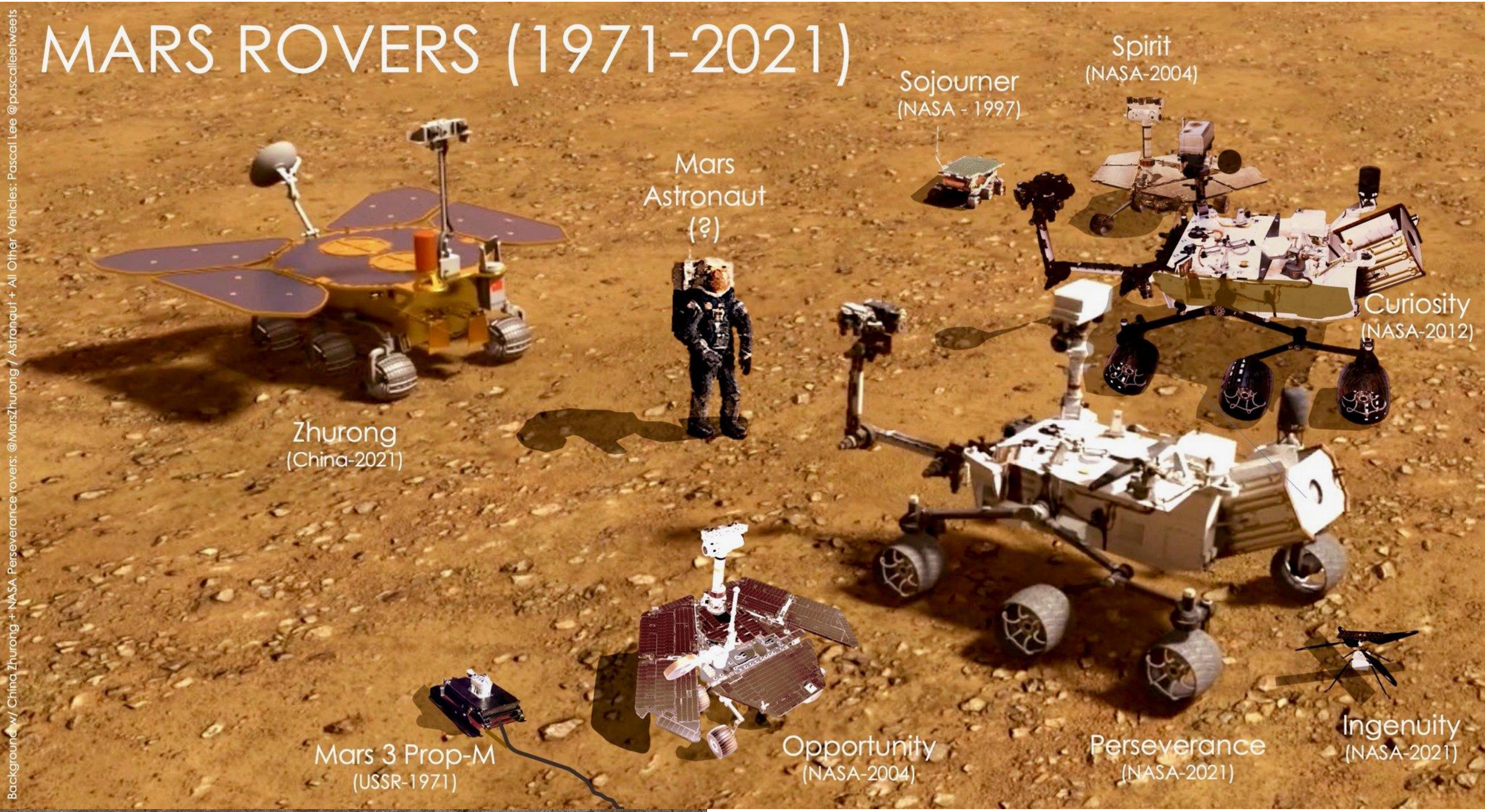
MARS ROVERS (1971-2021)
Sojourner
(NASA - 1997)
Spirit
(NASA-2004)
Mars
Astronaut
(?)
Curiosity
(NASA-2012)
Zhurong
(China-2021)
Mars 3 Prop-M
(USSR-1971)
Opportunity
(NASA-2004)
Perseverance
(NASA-2021)
Ingenuity
(NASA-2021)
Background w/ China Zhurong + NASA Perseverance rovers: @MarsZhurong / Astronaut + All Other Vehicles: Pascal Lee @pascalleetweets

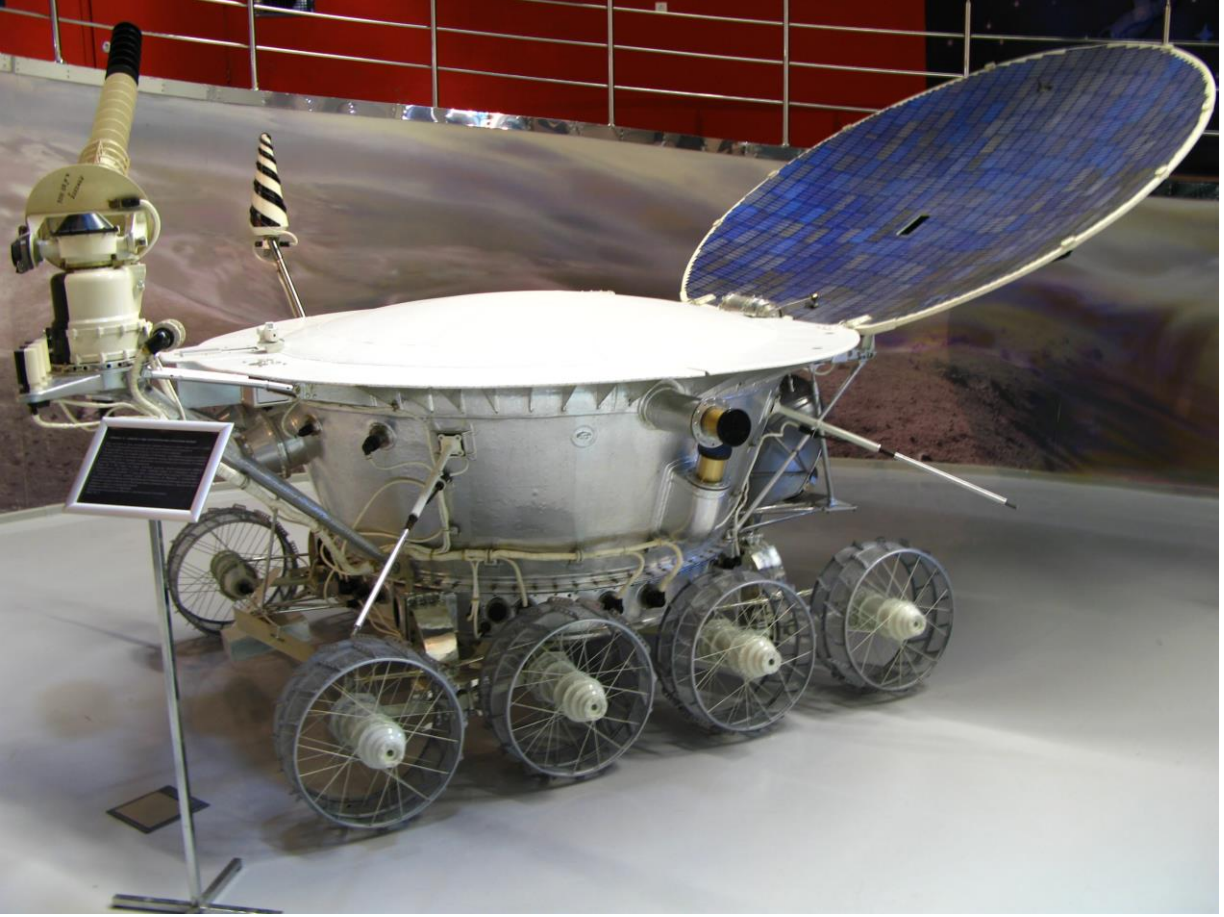

Lunakhod 1 (moon walker) was the first automated rover to land on the moon. Built by the Soviet Union to last for 3 Lunar days, it ended up lasting 11 lunar days (about 11 months). It ran off solar cells during the day and kept warm during the lunar nights with a polonium heat source. It is still used today as a reflector for lasers to determine the distance between the Earth and the Moon within 1 cm.